INFORMATION BULLETIN

Minor Stormwater System Standards for Residential Areas update

Issue Date	1 December 2015	NUMBER
Department	Development Services	**SP004**
Program	Strategic Planning	

1 Purpose of this Information Bulletin

To inform the development industry of the status of the proposed reduction of the minor residential stormwater system design standard, further to previous Information Bulletin SP003, including an update on the outcome of industry engagement and the Council briefing session. Please refer to SP003 for an introduction to this proposal.

2 Details

A draft discussion paper was produced and presented to industry in a briefing session in August 2015 and distributed via email. Feedback was received both via email and during the industry briefing. A summary of the feedback was produced and is available upon request by contacting Strategic Planning on the number and email address below. The feedback was incorporated into a revised discussion paper and included: the addition of a risk assessment, simplified explanation of the flows that contribute to a 1% AEP flow and their proportions, clarification on the expected cost benefit and a simple calculation of the additional time of inundation experienced by road users in the case study scenarios. The revised discussion paper is attached to this information bulletin.

The discussion paper was presented to Council at a briefing session on 14 October 2015. Council endorsed the recommendations to move from 18% AEP to 39% AEP, subject to amending the new planning scheme when appropriate in 2016.

Proposed amendments to the applicable engineering design guideline will be undertaken to reflect the reduction and associated design criteria, and will be available for feedback as part of the planning scheme amendment process.

Until such time as the planning policy relating to Engineering Guidelines is amended, Council is prepared to allow new residential developments, on a case by case basis, to be designed to the 39% AEP standard, subject to Development Engineering being satisfied that the criteria identified in the discussion paper can be adequately addressed. Developers and/or their consultants are encouraged to discuss their projects with Development Engineering prior to commencing detailed design.

3 Date of Effect

The implementation date of the reduced standard is subject to the timing of the adoption of the Mackay Region Planning Scheme and subsequent planning scheme policy amendment.

4 Enquiries

Please direct enquiries concerning this information bulletin to Strategic Planning at strategic.planning@mackay.qld.gov.au (or phone 4961 9129).

Issuer: Philip Grobler	**Issuer Position:** Actg Manager –Strategic Planning

Minor Stormwater System Standards for Residential Areas

Discussion Document - Draft

Strategic Planning, Development Services
29 September 2015

Revision History

Revision Date	Version	Revised By	Description of Revision
10 August 2015	Draft	Caitie Becker	Draft for industry comment
29 September 2015	Draft	Caitie Becker	Incorporating industry and internal feedback, risk assessment, implementation . For Council briefing purposes.

Personnel Information

Prepared By:	Caitie Becker
Title:	Contract Engineer, Waterways
Phone:	49619070
Email:	caitie.becker@mackay.qld.gov.au
Project ID:	
ECM Ref:	

Table of Contents

1. Introduction

Mackay Regional Council has identified the importance of achieving a balance between growth, level of service and financial sustainability moving into the future. As part of working towards a greater balance, areas of improvement have been identified. One area of focus is the stormwater system standards, particularly achieving balance between the whole of life costs and the level of immunity the system provide.

The stormwater system comprises two parts:

- the minor system (for the convenience and safety of pedestrians and vehicles in frequent/nuisance stormwater flows, generally underground including pits and pipes); and
- the major system (providing immunity from flooding, generally within a road reserve or open drain).

Figure 1 below, extracted from *Storm Drainage Design in Small Urban Catchments (JRK Argue) (Fig 2.1)* shows the relationship between the minor and major stormwater system in an urban environment:

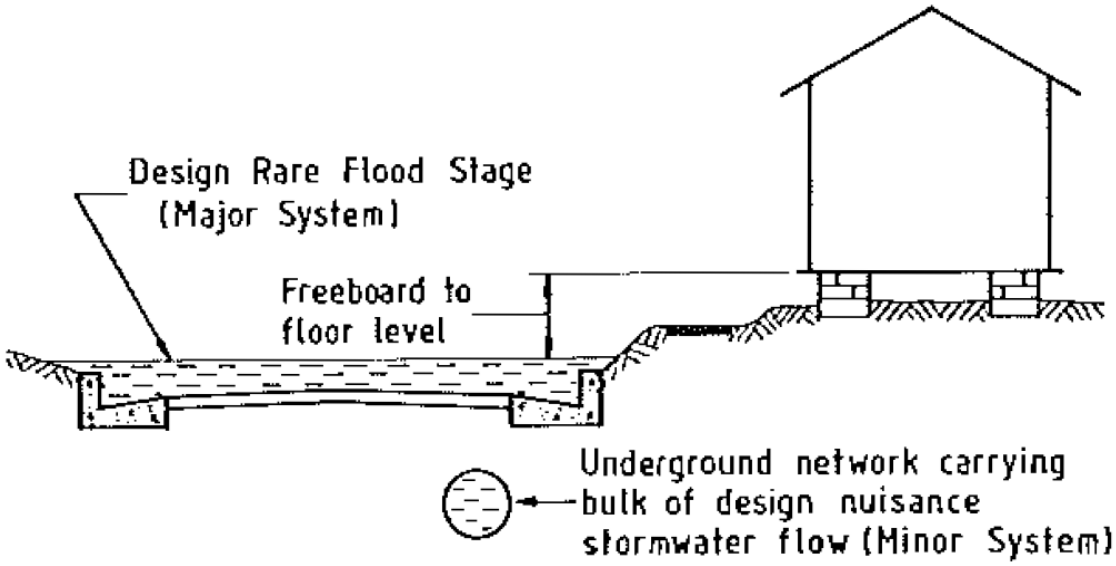

Fig. 2.1 — Major and minor drainage systems in the urban landscape

FIGURE 1: MINOR AND MAJOR STORMWATER SYSTEMS IN AN URBAN ENVIRONMENT

Mackay Regional Council (MRC) and its predecessors have traditionally utilised the *Queensland Urban Drainage Manual* (QUDM) to set the standards for stormwater system design in the region, with specific amendments outlined in various design standards. One such amendment that has consistently been applied is the requirement for the minor stormwater system for residential developments to cater for an event with 18% Annual Exceedance Probability (AEP), or a 1 in 5.5 chance of occurring each year (also referred to as the Q_5 event), rather than the QUDM recommended standard of an event with 39% AEP, or a 1 in 2.5 chance of occurring each year (the Q_2 event). Please refer to Section 1.1 below for further explanation of the terminology.

Therefore, the minimum standard for underground stormwater systems has been identified as a possible candidate for a level of service reduction, to achieve a greater balance with economy – both up front capital cost, and renewal cost over the whole-of-life. Reducing the current standard from a Q_5 system underground to the current QUDM recommendation for Q_2 will have both benefits and disadvantages, which are investigated in this discussion paper. The minor stormwater system comprises underground pipes and pits, where the size and number of both is dependent on various design criteria.

QUDM also makes a distinction between several different residential density categories, requiring that underground systems be designed to cater for an event with a 10% AEP, or 1 in 10 chance of occurring every year (a Q_{10} event) for densities of 20 dwellings per hectare (dwlgs/ha) or greater. The *Draft Residential Densities Strategy 2011* (DRDS) outlines MRC's vision for more compact residential living and densities greater than 20 dwlgs/ha are encouraged in some areas. A recent publication by the Urban Development Institute of Australia (UDIA), *The UDIA (Qld) Industry Insights Report 2015*, reports that there has been an 18% reduction in the median lot size in Mackay since 2009, which is expected to continue to decline. Higher density living presents unique challenges with regards to stormwater drainage, thus the design standards for this category need to be reviewed in comparison with QUDM. This discussion paper focusses on lower density development less than 20 dwlgs/ha, but comment will be made on the application of the QUDM standard to high density.

This discussion paper aims to investigate current industry best practice, and critically assess it against local practice to determine the most appropriate way to strike a balance between economy and levels of service specifically related to stormwater system design standards.

1.1 Terminology

There has been a shift in how floods and storm events are referred to, particularly when dealing with the public. Table 1 below outlines the 'old' and the 'new' terminology, and how they relate to one another.

TABLE 1: TERMINOLOGY

Reference to design storm event (Q_x)	Percentage chance of a flood occurring in any year (AEP – annual exceedance probability)	Chance of a flood occurring annually (1 in x)	Annual Recurrence Interval (ARI)	Description
	New terminology	Old terminology		
Q_2	39%	2.54	2	A common flood likely to be experienced every couple of years or so.
Q_5	18%	5.52	5	A small flood event which will mostly be contained within the stormwater pipe system (in new areas)
Q_{10}	10%	10	10	A small flood where flooding in the street is likely to occur
Q_{50}	2%	50	50	A medium sized flood
Q_{100}	1%	100	100	A large uncommon flood event that is rarely observed but still possible

For the purpose of this discussion paper, reference will be made to the design storm event (Q_x) or the percentage chance of a flood occurring in any year (AEP %).

2. Background

2.1 History

The history of stormwater system standards in the region is largely based on the history behind the various Council amalgamations. The current Mackay Regional Council was formed by the amalgamation of the Mackay City, Sarina Shire and Mirani Shire Councils in 2008. Prior to this, in 1994, the Mackay City Council was formed with the amalgamation of the Pioneer Shire Council and Mackay City Council.

The requirement for residential stormwater system design within the Pioneer Shire Council was Q_5 for minor systems and Q_{50} for major flows, while the Mackay City Council is thought to have been Q_2 or lower for minor with little or no consideration given to major flows. QUDM was originally released in 1992, and recommended Q_2 for minor systems and Q_{100} for major systems within urban residential developments. Both Councils adopted Q_5 for minor flows, Pioneer Shire maintained Q_{50} for major flows and Mackay City considered major flows on a case by case basis. After amalgamation in 1994, the Mackay City Council Development Manual was created in 1998 to set the standards for infrastructure design in the area. Councillors were satisfied with the apparent reasonable immunity provided by the Q_5 system, and were reluctant to downgrade the standards. Therefore, a Q_5 minor system requirement was maintained (with the major system requirement being Q_{50}). Provision was made for a reduction of the underground system to Q_2 where the volume of flows in a major event were above $10m^3/s$, with prior agreement.

In 2006, an increase to Q_{100} for the major system design requirement was adopted in the new Engineering Design Guidelines (which superseded the Development Manual). The minor system requirement remained at Q_5.

The Sarina Shire Council referred largely to the Mackay City Council Development Manual for their design standards, and thus also adopted Q_{50} major/Q_5 minor design standard.

The Mirani Shire Council differentiated between higher density residential and lower density residential, and required Q_2 for densities less than 15 dwlgs/ha, and Q_{10} otherwise. The major system design requirement was Q_{100}.

2.2 Current policy

Since amalgamation into the current Mackay Regional Council, the three planning schemes of the former Councils have remained current. The existing stormwater system design standards are shown in Table 2 below:

TABLE 2: CURRENT MACKAY REGION STORMWATER SYSTEM STANDARDS FOR RESIDENTIAL AREAS

Former Council	Minor System	Major System
Mackay City	Q_5	Q_{100}
Sarina Shire	Q_5	Q_{50}
Mirani Shire	Q_2	Q_{100}
QUDM	Q_2	Q_{100}

2.3 Proposal

The *Draft Mackay Region Planning Scheme* (DMRPS) was submitted to the Minister for Infrastructure, Local Government and Planning in December 2014 seeking approval to adopt the scheme. Once adopted, it will bring the three former Council areas together under the one set of standards. This includes the Engineering Design Guidelines, which in the current Draft edition are based on the Mackay City standards. It is expected that the recommendations from this discussion paper will inform an amended PSP SC6.12-10 Engineering Design Guideline – Stormwater Drainage Design.

The proposed reduction of the minor system underground design standard from Q_5 to Q_2 and the possible introduction of a new category of higher density residential development greater than 20 dwlgs/ha requiring Q_{10} needs to be balanced with an acceptable level of service, with minimal impact on residents. If adopted, the reduced standard should only be applied to new developments and new 'greenfield' capital works, to ensure a decreased level of service is not experienced by existing residences. Renewal of existing systems needs to continue based on the original design, or if the existing system is designed to a much lower level (such as parts of the CBD or South Mackay) it can be brought up to meet the standard at Q_2. The recommendations in QUDM should generally be adopted, unless there are compelling or locality-specific reasons not to.

Due to complexities and issues surrounding interallotment drainage systems, it is proposed that the current requirements for these systems remain in place until a thorough review of interallotment drainage can be undertaken.

2.4 Desired outcomes

As a result of this investigation into the possible reduction of the minor stormwater system standards, the following key outcomes have been identified, seeking a balance between the key areas of level of service, growth and economy:

1. Maintain an acceptable level of service to the community with regards to the level and frequency of inundation and nuisance during minor and major storm events (*Level of Service)*;
2. Ensure there is a 'no worsening' effect on existing areas (*Level of Service*);
3. Reduce capital and asset renewal costs ('whole of life' costs) of stormwater pit and pipe infrastructure (*Economy*);
4. Reduce maintenance costs of stormwater pit and pipe infrastructures (*Economy*);
5. Align the region with current industry practices for the design storm events and standardise the design standards across the region (*Growth*);
6. Assist with reducing the impacts of increased density within new developments on stormwater infrastructure costs *(Growth and Economy)*.

The recommendations in Section 9 are based on these five outcomes.

3. Literature Review

A review of QUDM and current standards of other Councils with similar climatic conditions was undertaken to compare MRC's current practice with industry standard. It is noted that there is no specific legislative or regulatory requirement that determines the minimum level of service for stormwater drainage systems that needs to be set by authorities.

Additional industry-utilised texts exist outside of QUDM, which have not been included in this literature review. QUDM is the most widely-used, and reflects best-practice advice that is incorporated into the other texts.

3.1 Queensland Urban Drainage Manual (QUDM)

QUDM is the acknowledged industry standard for stormwater system design throughout Queensland and forms the basis of the standards of many Councils. It was originally issued in 1992 after being developed by the State Government to inform stormwater design across the state. At the time of writing this discussion paper, the current revision is 2013 Provisional. It is currently being updated and is expected to be released at the end of 2015, however instruction from the Minister is to utilise it as a complete document in the meantime. Caution should be used in referencing QUDM in any new policies, to ensure the reference remains valid even in future revisions.

QUDM states that the local authority may vary the design AEPs from the recommendations in QUDM to suit local conditions, taking into consideration the required level of service for hydraulic performance, construction and operating costs, maintenance requirements, risk assessments, safety, aesthetics, regional planning goals, legal and statutory requirements and convenience/nuisance reduction. It is not recommended that design standards less than those in QUDM be adopted.

QUDM recommends Q_{100} for the major system, and Q_2 for the minor system in residential areas where the density is less than 20 dwlgs/ha. For densities greater than 20 dwlgs/ha, QUDM recommends Q_{10} for the minor system. This discussion paper has included basic analysis of this category by comparing the current Q_5 criteria with the QUDM-recommended Q_{10} and discusses when this criteria applies (ie when the site is considered to have a density of more than 20dwlgs/ha). Further analysis is excluded, and it is recommended that this topic be the subject of further investigation and discussion, for inclusion into any future amended engineering design guidelines.

Upon undertaking this literature review, it has become apparent that the existing engineering design guidelines don't reflect the current QUDM standard in a number of areas. Whilst further investigation hasn't been undertaken within the scope of this discussion paper, it is recommended that a review of the current engineering design guidelines be completed with the aim of reviewing the guidelines for a more broad adoption of QUDM (albeit with specific departures for the Mackay region).

3.2 Other Queensland councils

A review of the design guidelines for other Councils in a similar geographical area and which experience similar climatic conditions was undertaken. Councils included in this review were members of Far North Queensland Regional Organisation of Councils (FNQROC - Cairns Regional, Mareeba Shire, Croydon Shire, Hinchinbrook Shire, Tablelands Regional, Cassowary Coast Regional, Douglas Shire, Cook Shire and Wujal Wujal Aboriginal Shire Councils), Townsville City Council, Burdekin Shire Council, Whitsunday Regional Council, and those which utilise the Capricorn Municipal Development Guidelines (Rockhampton Regional, Livingstone Shire, Gladstone Regional, Banana Shire and Central Highlands Regional and Maranoa Regional Councils).

The minor stormwater system standards for residential areas were reviewed, and the design rainfall intensities compared with Mackay to ensure similar climatic conditions during the peak wet season. Intensities for a 1 hour, Q_{10} event ($^{1}I_{10}$) and a five minute, Q_1 event ($^{5}I_1$) were utilised to look at the design event utilised in QUDM for the Rational Method, and the short intense events. The results are included in Table 3 below

TABLE 3: COMPARISON OF COUNCIL STORMWATER SYSTEM DESIGN STANDARDS FOR RESIDENTIAL AREAS UP TO 20 DWLGS/HA

Council/Region of Councils	$^{5}I_1$ intensity (mm/hr)	$^{1}I_{10}$ intensity (mm/hr)	Minor system	Major system
Mackay	125	80-90	Q_5	Q_{100}
Sarina	110-120	80	Q_5	Q_{50}
Mirani	120-140	70-80	Q_2	Q_{100}
FNQ ROC	100-140	60-90	Q_5	Q_{100}
Townsville*	110-130	70-80	Q_2	Q_{100}
Burdekin	110-120	70-80	unknown	unknown
Whitsunday	120-130	70-85	Q_2	Q_{100}
Capricorn ROC	95-120	60-70	Q_5	Q_{100}

* Townsville City Council have advised that the current standards within their 2014 City Plan are onerous and difficult to achieve and that the industry has reverted back to utilising the previous Thuringowa City Council standards, which are represented in Table 3 above. They have also advised that large changes will be made to the document to enable industry to achieve the criteria moving forward. The current Townsville City Plan standards are dependent on zoning of the land being serviced, along with the road classification the underground system is within. For residential developments of all densities, the standard is Q_{10} for arterial roads, Q_5 for Collectors and Q_2 for Local and rural streets.

3.3 Observations

Based on a comparison of QUDM, MRC standards and those of other Councils, the following basic observations were made:

1. Intensities:
    a. The rainfall intensity in the Mackay Region is very similar to the regions used in the comparison for both ${}^{1}I_{10}$ and ${}^{5}I_{1}$ events and the comparisons are therefore reasonable to be used.
    b. The Capricorn ROC experiences slightly lower intensities than Mackay but is still similar enough to be included in the comparison.
    c. The Councils in FNQROC experience the most similar intensities to those in the Mackay Region.
2. Major event:
    a. All Councils except the former Sarina Shire Council require Q_{100} for the major design event.
    b. The major design event requirement in Mackay of Q_{100} is consistent with the QUDM requirement.
3. Minor event:
    a. Mirani Shire, Townsville City and Whitsunday Regional Councils require Q_2 for the minor design event. All other Councils require Q_5.
    b. The minor design event requirement in Mackay of Q_5 is higher than the QUDM requirement of Q_2, but fairly consistent with the comparison Councils.

Representatives of some of the above Councils were contacted and asked to provide background as to how their current standards came into practice. The responses included:

- Rockhampton Regional Council:
    - The increase from QUDM Q_2 to Q_5 was as a result of industry pushing for it;
    - From Council's perspective the larger pipe size is only slightly more expensive and gives more room for error;
    - Southern Councils that have adopted Q_2 have a major focus on overland flow, which isn't always able to be achieved in some areas so any flow in excess of Q_2 that can be captured underground is an advantage.
- Townsville City Council
    - The current TCC standards are difficult to design for and to achieve, as they have different immunity requirements for the underground system depending on the classification of road which results in designers having to run different scenarios within the one development;
    - Council will be making large changes to the standards;
    - Currently designers are reverting back to previous standards, which utilises Q_2 for standard residential;
    - Commercial/industrial systems were reduced from QUDM's recommended Q_{10} to Q_5 some years ago to reduce infrastructure cost
- No reply was received from other Councils.

4. Design Considerations

Stormwater drainage systems are complex, and rely on much more than the design AEP to determine the pipe and pit sizes. Factors impacting on the design include topography, land use (zoning and resulting physical constraints), external catchments and standards for safety and effectiveness.

Case studies have been undertaken (refer Section 6) that will encompass the major considerations to ensure a rounded view of the possible advantages and disadvantages.

4.1 Topography

Very flat sites – such as those in likely future growth areas of Ooralea, Bucasia, Shoal Point, Mirani and Paget – are often challenging to drain adequately for both minor and major flows. Major flow design criteria can impact on the minor system design. It is sometimes more effective (or necessary) to convey parts of the major flow underground in order to limit the earthworks required to restrict the major flow to the road reserve, or to achieve major system criteria (such as flow depth or width) within the road reserve. Further, downstream drainage levels and required depth of cover to stormwater pipes can be physically difficult, and trunk open drains can become very large and deep. It is this balance between pipe systems and earthworks that needs to be achieved to ensure a development is economical.

In a standard situation, approximately 45% of the Q_{100} flow is captured underground in a Q_5 system. When reduced to a Q_2, that reduces to approximately 30%. The additional 15% needs to be accommodated within the above ground system, which may be difficult in topography where the road reserve has limited capacity due to flat grades. In these flat areas of the region, the systems are generally drowned systems where the design is elevation-head driven and the full capacity of the pipe is being utilised; however, if the major storm criteria is the driving force behind the sizing of underground pipes a reduction to Q_2 will have little positive impacts.

Conversely, sloping or free draining sites (such as those in the areas of Richmond and Rural View) can sometimes be drained with ease and comparatively little cost; however, large upstream catchments flowing through the site can dramatically impact on the stormwater drainage philosophy. The high velocity of the flowing water in steep sites can also result in significant stormwater pit bypass, needing additional pits to capture the flow, rather than the pits being necessary for volumetric or configuration reasons. Underground pipe systems in these situations are often sized based on velocity requirements rather than capacity, with pipes only flowing partially full in the design storm.

The case studies undertaken in Section 6 include both a flat and a free-draining site.

4.2 Land Use

The density of developments in Mackay over the last 5 years has been increasing. This has been encouraged in the *Draft Residential Densities Strategy* and in the *Draft Mackay Region Planning Scheme*. The *UDIA (Qld) Industry Insights Report* states that the median lot size in the Mackay local government area was 643m^2 in 2014, a reduction of 18% in five years since 2009. The trend is expected to continue to smaller lot sizes and increased densities.

The 2006 planning scheme had a standard lot size of 800-1000m^2 with 40% imperviousness. The current Draft planning scheme is closer to 400-600m^2 with 70% imperviousness.

The following graphic, extracted from the UDIA (Qld) Industry Insights Report shows the trend:

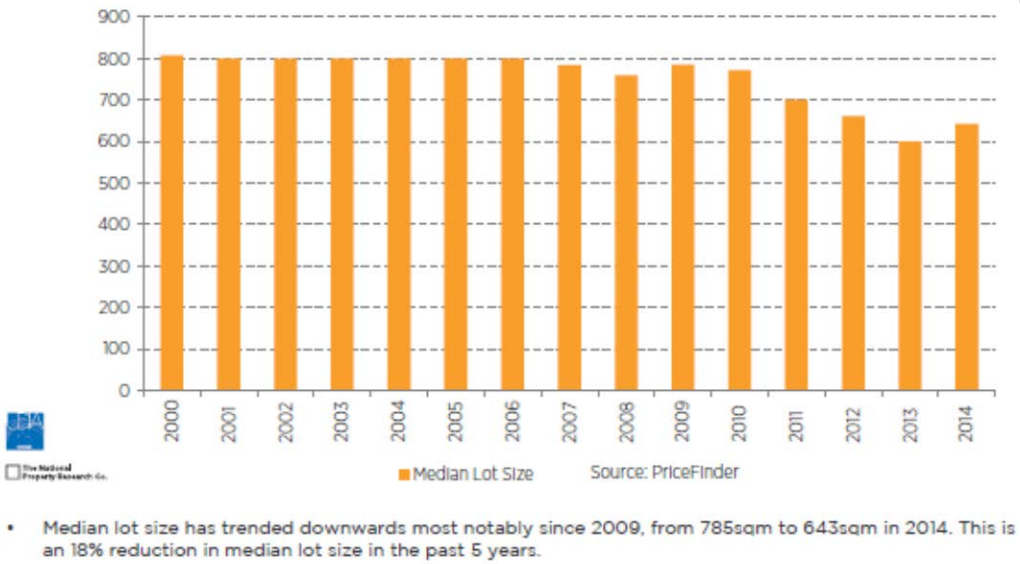

FIGURE 2: MACKAY VACANT LAND MEDIAN LOT SIZE 2000-2014 (EXTRACTED FROM THE UDIA (QLD) INDUSTRY INSIGHTS REPORT)

Increased housing density leads to a number of factors that impact on stormwater system design:

- Increased impervious area, leading to higher volume of runoff
- Reduced Time of Concentration, leading to an increased peak runoff
- Reduced frontage widths and more obstacles (street trees, driveways, traffic calming devices, etc) reducing possible locations for stormwater pits

The increase in runoff due to imperviousness and time of concentration would be experienced regardless of the reduction of the design AEP, and therefore the reduction in the design storm to a Q_2 will assist to counteract the cost implications of this. However, in developments where lots have narrower frontages, the constraints on the physical locations

of inlet pits may be a factor. Whilst a theoretical reduction in pit numbers may be possible, physical constraints on their locations may require just as many, or nearly just as many. Minimum distances from traffic calming devices, street trees, street lights and driveways will still be applicable.

The following graphic, extracted from the Draft Residential Densities Study, gives a representation of various housing densities.

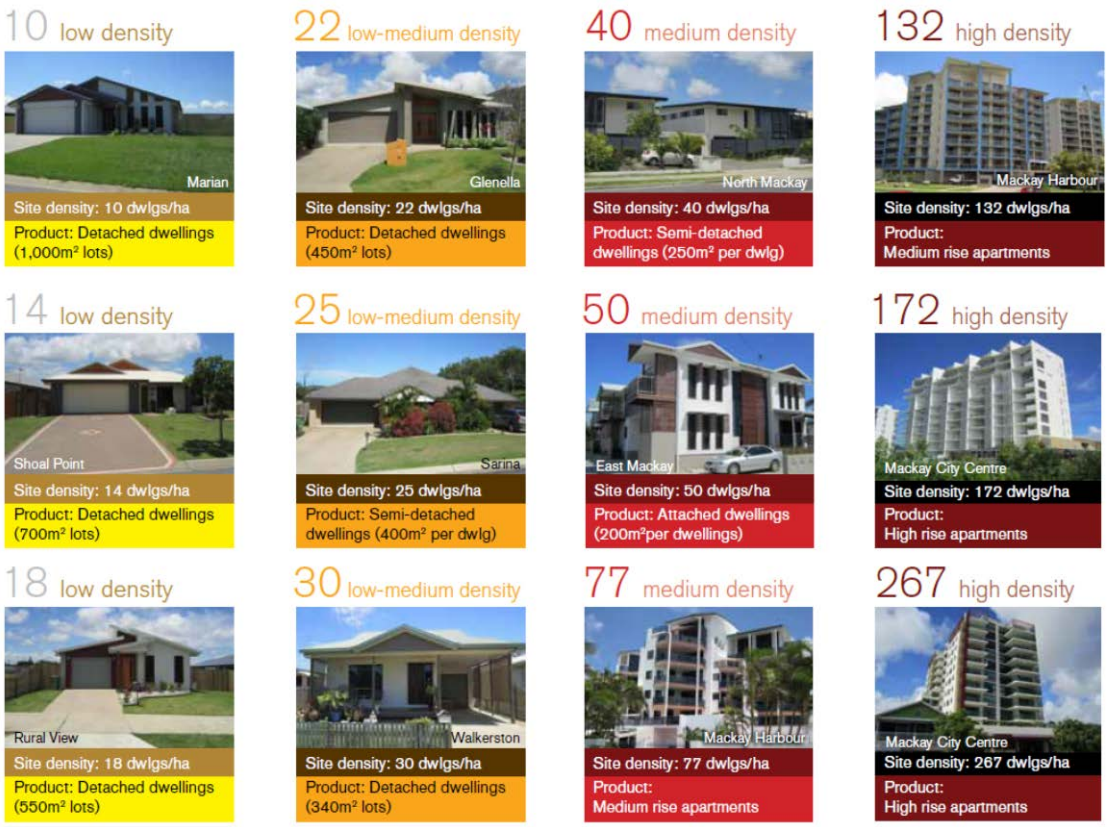

FIGURE 3: PICTORIAL REPRESENTATION OF DIFFERENT HOUSING DENSITIES AND THEIR FORMS (EXTRACTED FROM THE DRDS)

The case studies undertaken in Section 6 below are based on a density of 15-18 dwlgs/ha (approximately 600-650m^2 per lot) , which is in line with the current median lot size but still under the 20 dwlgs/ha limit in QUDM before the Q_{10} requirement is introduced. To represent a situation of medium density detached or semi-detached dwellings, a case study density of 30 dwlgs/ha (approximately 330m^2 per lot) was also included, focussing on a Q_5 and Q_{10} comparison. A narrower lot frontage was used in the latter, considering pit locations and obstacles. Although this case study has been included for consistency and comparison purposes, further investigation should be undertaken to determine its inclusion in future amended engineering design guidelines.

Two of the most recent highest density developments in Mackay were considered, namely River's Edge development in Glenella (only 4.3ha in total, including significant parkland), and

Plantation Palms Stage 4 in Rural View (approximately 27ha in total). River's Edge achieves an overall density (excluding parkland) of approximately 24 dwlgs/ha. Plantation Palms Stage 4 achieves 18 dwlgs/ha (through a mix of high density, medium density and low density sites). These are arguably two of the densest developments in the region, one of which just exceeds the criteria, and the other doesn't. Therefore, it is not considered very likely that the overall density of 20 dwlgs/ha will be exceeded often in the foreseeable future.

4.3 External catchments

The effect of external catchments varies greatly for each specific site. In some instances, the external upstream catchment needs to be diverted around the site, or sometimes piped as a major event underground. It can either be kept separate to the underground system from the development itself, or combined.

Downstream catchment capacities may result in the need for detention systems in the development, and may impact on the lawful point of discharge.

As the impact of external catchments varies so widely from site to site, no specific example has been incorporated into the case studies. In general, it has been considered that any positive or negative impacts applicable to the reduction from Q_5 to Q_2 will apply regardless of external catchments. What will need to be considered, however, is the applicability of the proposed reduction to sites with external catchments, or where the underground system connects to an existing or lower-immunity system. These will vary on a case-by-case basis.

4.4 Safety and effectiveness

Regardless of the design AEP, various standards apply in the design of stormwater systems to ensure public safety and effective operation of the system:

- Depth/velocity product no greater than $0.4m^2/s$ for pedestrian safety;
- Flow width limitations (dependent on category of road);
- Flow depth limitations (dependent on road use, flowing or stagnant water, and adjacent property floor levels; generally no greater than 250/300mm within road reserves or 50mm above top of kerb);
- Minimum pipe size 375mm diameter to reduce blockages and allow for maintenance.

Each of these criteria impact on the location and size of stormwater pits, the size of the pipe system the pits are draining in to and the capacity of the above ground system, and will be maintained. In some cases, they might require the underground system to be increased to ensure the aboveground criteria can be met. The flow depth limitation is generally the driving factor for topographically flat sites, and with an additional 15% (approximately) of the flow aboveground, this could be worsened. In systems where the major flow is not within a road reserve (such as when it is an open drain), the major system criteria has no impact on the underground system.

Another safety consideration is the frequency of water ponding in the roads and its impact of vehicles and pedestrians. A Q_5 storm will currently be contained in the underground system, with allowable ponding in the road (to a width depending on road classification) to still enable safe vehicle travel. A Q_5 storm in the future (if a Q_2 system is adopted) will have ponding in the road to an increased width. The worst case design storms are typically short duration storms with a higher intensity, however, so the increased time and depth of ponding will be negligible. Further details are included in Section 5.2.

The case studies reviewed in Section 6 apply the above requirements as in a normal design, ensuring that the resulting system complies with the same standards as an actual design would and enabling more accurate representation of any benefits and disadvantages.

5. Benefits and disadvantages

5.1 Cost

5.1.1 Capital construction cost

The 'Estimates and Annexures' spreadsheet developed by Council's Technical Services was utilised for each Case Study in Section 6 to estimate the capital construction cost of each resulting design. A simplistic view of pit, pipe and lot earthworks cost was considered and a direct comparison made between each design storm event within each case.

It is important to note that the reduction may only be beneficial in the upper reaches of a catchment, or in the case of a large development within the smaller upstream catchments. Depending on other drainage factors and methods, the designer may decide that it is more economical for capital construction cost to remain with the current 18% AEP standard.

5.1.2 Maintenance cost

Discussions were held with Council's Civil Operations program to determine the current maintenance issues, and how they would be impacted by the proposed change. The following summarises the discussion:

- Majority of maintenance is associated with pits and joints;
- Most common maintenance is cleaning out of pits and relining pipes;
- Relining of pipes is often required after 20-25 years in service and can give an additional 50 years of useful life before reconstruction is required;
- Relining is often the result of joint failure due to sand infiltration or incorrect/poorly constructed joints;
- An increase in damaged pipes as a result of construction loading (rather than in-service loading) is being experienced shortly after asset handover;
- CCTV of stormwater systems before asset handover would be useful in ensuring Council are handed infrastructure in good condition and without premature degradation or failures;
- Reduction in pit numbers and pipe lengths would proportionally reduce maintenance cost, even though the same maintenance on each pit and pipe would be required;
- Relining a smaller pipe is less expensive than relining a larger pipe;
- Additional flow in the major system may increase scour and prolong saturation.

Average maintenance costs were sought and provided, but it was not considered a good use of time as part of this discussion paper to quantify the costs for each case study. Considering the major points above, it is clear that a reduction in pit numbers, road crossings, pipe lengths and pipe sizes will lead to a decrease in maintenance costs. It is important to note that the designer may elect to remain with a higher standard of design for the minor system, thereby removing potential cost savings for maintenance.

Although not part of the scope of this discussion paper, the issue of the standard of construction of new assets handed over to Council appears to be significant, and has more of an impact on on-going maintenance costs than anything else. It is therefore recommended that this be looked into further.

5.1.3 Asset renewal/reconstruction cost

Discussions were held with Council's Civil Operations program to determine the current driving factors behind the renewal and reconstruction of stormwater systems. The following summarises the discussion:

- Reconstruction program of roads in older parts of Mackay (South Mackay, North Mackay, East Mackay and West Mackay in particular) generally leads to the reconstruction of the underground stormwater system if the system is reaching the end of its useful life, even if it doesn't require reconstruction itself at the time;
- The major cause of reconstruction (outside of being done in conjunction with road reconstruction) is complete failure of pipe joints, which is even being seen in systems that are relatively new (ie less than 50 years old);
- Reconstruction would be not reduce the level of service of an existing system, and would either replace the system with the same size, or would upgrade the system for increased immunity.

As with Section 5.1.2 above, average renewal and reconstruction costs were sought and provided, but it was not considered a good use of time as part of this discussion paper to quantify the costs for each case study. Considering the major points above, it is clear that a reduction in the original system design will lead to a decrease in renewal/reconstruction costs. It is important to note that the designer may elect to remain with a higher standard of design for the minor system, thereby removing potential cost savings for asset renewal/reconstruction.

5.2 Level of service

5.2.1 Major system – potentially damaging flooding

The frequency and severity of potentially damaging flooding will not change with the implementation of this policy. The major design storm event will remain at Q_{100}, so road reserves and open drains will still contain flows up to Q_{100} to prevent encroachment into properties. The volume of water within the above ground system will increase by approximately 15% (with approximately 30% of it being taken in the underground system as opposed to 45% with Q_5). An alternative view of the proportion of the peak flow contributed by the major and minor systems is included in Table 4 below:

TABLE 4: CONTRIBUTING SYSTEM FLOWS TO Q_{100} FLOW

System	Current (Q_5) proportion of peak (Q_{100}) flow	Proposed (Q_2) proportion of peak (Q_{100}) flow	Change to flow in major sytem from Q_5 to Q_2
Minor	45%	30%	-33%
Major	(55%)	(70%)	+27%

The peak flows within the street system (the major system) will increase by 27%, from 55% of the overall peak flow to 70%. It should be noted that the overall peak flow is not increasing – just the proportion that is conveyed in the major/above ground system versus the minor/underground system. The peak flow in the major drainage system will still be contained within the road reserve, and not encroach into private property.

To demonstrate the impact the additional aboveground flow will have, a preliminary calculation was undertaken based on a flat site (the worst case scenario to catering for major flows), and is summarised below:

- Access Street, 15m wide road reserve, 1:500 grade, standard verge cross-falls
- Road flow capacity approximately 1m^3/s, flow depth 0.22m at invert
- Increase in major flow by 27% to 1.27m^3/s
- Resulting flow depth 0.24m (increase of 20mm) – maximum allowable depth is 0.25m

To ensure the flow does not encroach into the property boundary, the civil design will need to cater for this increased depth either with earthworks to increase the height of the allotment, additional pits and pipes to capture the flow underground, or suitable alternatives. This will ensure that there is no increased risk to properties. Additional design documentation standards will be implemented to ensure that the increased volume of water in the major system is properly catered for.

The results of the increase to the major flow and its impact on the drainage design can be seen in the Case Studies in Section 6.

5.2.2 Minor system – nuisance flooding

The frequency and severity of nuisance flooding will increase with the implementation of this policy. Whilst the underground system will still be designed to cater for the minor event, the chance of the minor event being exceeded will increase from 18% each year to 39% each year (ie twice as often). Nuisance flows will be more frequent. Therefore, in a Q_5 event, the level of nuisance will be higher in a new development designed to Q_2 than it would have been if that development had been designed to Q_5. However, if this policy is only applied to new developments there will be no direct comparison, or for the replacement of systems that were designed to be less than Q_5 originally there will be an improvement. For all events below the major design event of Q_{100}, it will still not reach a damaging level, as runoff will still be contained within the major stormwater system.

It is difficult to quantify the level of nuisance, as each catchment and each storm event is so different. For a typical residential street, the total rainfall received in a 20 minute Q_2 event is 32mm, while 45mm will fall in a 20 minute Q_5 event – 13mm difference. Over the course of an hour, 55mm will fall in a Q_2 event and 70mm in a Q_5 – a 15mm difference. The effect that this will have on a stormwater system varies greatly depending on recent rainfall behaviour, the rainfall pattern, downstream drainage conditions and where it falls within the catchment.

A rainfall event that exceeds the minor system capacity will result in a depth of water at the centreline of the road; up to and including the design standard there is to be a 0mm depth of water at the centreline of the road. As the chance of the minor system capacity being exceeded each year is increasing from 18% to 39%, there will be water over the centreline of the road more frequently, and the water will be ponded in the road for a longer period of time. A comparison of the time of submergence for two different pits within the case studies was made, and is included in the results for those case studies in Sections 6.2.2 and 6.3.2 below. The outcome shows a very insignificant increase in the time that water remains in the road those particular scenarios, to a maximum of 2.5 additional minutes in a Q_{100} storm event under the reduced standards.

5.3 Other

5.3.1 Density

The increase in density experienced over the last 5 year is expected to continue leading to an increase in runoff within urban developments and an increased cost in managing stormwater. The reduction of the minor system design event to Q_2 will assist in offsetting these costs from an economics perspective, working towards a balance between cost, growth and level of service. Without this reduction, the increased density and increased runoff would continue to result in increased underground pipe sizes and pit numbers. With overall increased density, however, comes an increased volume of runoff and decreased time of concentration which is not reflected in the current engineering design guidelines.

5.3.2 Design risk

The decreased volume of stormwater underground will lead to an increased volume above ground (in the order of 15%), requiring a greater level of confidence in the major system design. Therefore, the risk to property and residents is higher if there are errors in the design. To combat this, a minimum level and detail of documentation for Operational Works applications (and indeed renewal construction design) should be set. This will ensure MRC assessment officers are able to assess the adequacy of the design more easily, to help mitigate the risk associated with the major storm flows. The recommended documentation standards have been included in Section 8.

6. Case studies

6.1 General

To avoid the specifics of particular sites, a hypothetical situation has been developed that can be easily adjusted to focus on different considerations. The hypothetical site consists of a single street at a consistent grade with uniformly sized lots that grade to the road frontage. Traffic calming has generally been applied where required to simulate some of the physical constraints. The road was continued as a straight road to allow simplicity and consistency. It is acknowledged that this is not a desirable planning or engineering outcome; however, the focus is on the stormwater design and not the layout.

The stormwater system design was undertaken on each of the case studies, taking into account both minor and major system standards, to ensure that the resulting design mirrored that which would be required in a new subdivision being submitted for Development Approval.

The following case studies were included:

1. Low density, flat site:
   15dwlgs/ha (630m^2 lots with 18m frontages), road at 1:500 grade, lots at 1:200. Comparing Q_5 and Q_2
2. Low density, sloping site:
   15dwlgs/ha (630m^2 lots with 18m frontages), road at 1:50 grade, lots at 1:20. Comparing Q_5 and Q_2
3. Higher density, flat site:
   30 dwlgs/ha (315m^2 lots with 9m frontages), road at 1:500 grade, lots at 1:200. Comparing Q_5 and Q_{10}

The Case Studies can be found in Appendix A, Appendix B and Appendix C.

The following details were adopted across all cases:

- 15m wide Access Street with standard pavement width and configuration;
- Length of road 500m (following a few model runs to test the optimum length for comparison purposes);
- Standard footpath grades, depending on the case topography;
- Road gully style grated stormwater pits, 2.4m lintels;
- Stormwater pit locations at boundaries or mid-lot;
- Free draining outlet, tailwater level at obvert of pipe;
- 600mm standard cover to pipes;
- 250mm maximum flow depth at lip of kerb for flowing water;
- 0mm depth of flow at road centreline during minor events;
- Depth.velocity product 0.4m^2/s.

In a real life scenario, a 500m straight road is unlikely. Intersections and adjoining roads would have been encountered in the upper parts of the catchment, including sag points, vertical grade changes, cross-drainage and other issues which introduce complexity into the design. These are very site specific though so they were excluded for the purpose of this comparison. Whilst the modelled scenarios only really look at the top of a catchment, throughout a large-scale development there are several of these catchments working individually, before combining further downstream. Therefore, these results can be considered to emulate situations found multiple times within a larger site, before multiple catchments combine. For small- to mid-scale developments, there are generally only small numbers of catchments similar to these studies.

It is considered that the comparison results would still apply to a real-life scenario, as the focus of this discussion paper is on the differences between the Q_5 and Q_2 situation within the same site.

Mackay Regional Council's 'Estimate and Annexures' estimating spreadsheet was used to determine the construction costs for each case. Overheads, incidentals and non-stormwater based items were ignored to ensure a direct comparison was made for each case.

6.2 Case 1: Low density, flat site

For this low density scenario, lot sizes of approximately 630m^2 were used. The Q_5 and Q_2 events were modelled in Case 1, including the major Q_{100} event to check the design criteria and its impact on the minor system. The plans showing the layout and design outcome are included in Appendix A.

Notations have been made on the plans showing the extent of earthworks required to ensure no encroachment of the major flow event occurs inside the property boundaries, further to the explanation provided in Section 5.2.1. Notations also show when the pipe size was increased from the minor flow requirements to cater for the major flow requirements.

6.2.1 Design criteria

The design criteria in Table 5 below were used, in accordance with QUDM:

TABLE 5: CASE 1 DESIGN INFORMATION

	Q_5	Q_2
Time of concentration	15 min	15 min
Fraction impervious	0.65	0.65
Minor runoff coefficient	0.79	0.71
Major runoff coefficient	1.0	1.0
Q_{100} max road flow depth at lip of kerb	0.25m	0.25m
Q_{100} max depth.velocity product	0.4m^2/s	0.4m^2/s

6.2.2 Design results

The design for each case shows that increased pit numbers are required for the Q_5 scenario, leading to increased road crossings. Pipe sizes are also consistently a size larger along nearly the entire length of road in the Q_5 scenario. However, earthworks to the lots were required sooner in the Q_2 case to prevent major flow encroachment into the lots. The design was ceased at 500m along the theoretical road where it was considered that adequate comparison results had been given and consistency in the design had been reached. The underground system had reached the point with the Q_2 design where it was necessary to increase pipe sizes to cater for some of the major flow, and both Q_2 and Q_5 scenarios required minor filling to the lots (to a maximum of 30mm) to ensure no major system encroachment occurred within the property boundaries.

The results are included in Table 6 below:

TABLE 6: CASE 1 RESULTS COMPARISON

		Q_5	Q_2
Pit spacings (and road crossings)		Every 2.5 lots	Every 3 lots
Pit numbers (over 500m)		22	18
Final pipe size		1200mm dia.	1050mm dia.*
Metres down road when e/works are required to lots		325m	235m
Earthworks (to prevent major event encroachment)		$250m^3$	$450m^3$
Length of pipes:	375mm	69m	57m
	450mm	45m	54m
	525mm	45m	54m
	600mm	45m	108m
	750mm	90m	108m
	825mm	45m	54m*
	900mm	81m	54m*
	1050mm	90m	45m*
	1200mm	45m	0m
Total length of pipes		555m	534m
Cumulative volume of pipes (to indicate overall system size)		$281m^3$	$207m^3$

* Pipe size increased from minor pipe size requirements, to cater for major flow requirements.

A calculation of the time of submergence for two pits (one at the head of the system, and one at the downstream end) within this case study was undertaken using a simplified unit hydrograph. Comparison was made between the total time in a Q_{100} event with a Q_5 system and with a Q_2 system.

The results are included in Table 7 below

TABLE 7: CASE 1 Q100 TIME OF SUBMERGENCE

	Q_5	Q_2	Difference
Pit 3/1	15 mins	17 mins	2 mins
Pit 10/1	15.25 mins	16.5 mins	1.25 mins

The comparison shows an insignificant increase in the time of submergence for each pit in a Q_{100} event as a result of decreasing the design standard to Q_2. At Pit 3/1 (near the head of the underground system) the road is submerged for an additional 2 minutes. At Pit 10/1 (near the downstream end of the system within the study boundaries) the road is submerged for an additional 1.25 minutes.

6.2.3 Cost

The design was input into MRC's 'Estimates and Annexures' spreadsheet to produce an estimated construction cost of the pits and pipes. Earthworks to the lots were treated simplistically, assuming the noted depth of earthworks applied, on average, to the entire lot and a rate of \$25/m^3 of imported fill was assumed. The costs are included in Table 8 below.

TABLE 8: CASE 1 CONSTRUCTION COST COMPARISON

	Q_5	Q_2
Pipe supply and install cost	\$359,800	\$288,300
Pit supply and install cost	\$106,600	\$86,000
Earthworks supply and place cost	\$6,300	\$11,300
Total	\$472,700	\$385,600

The comparison shows approximately 20% higher costs for a Q_5 minor stormwater system compared to Q_2. For this case study, with 58 lots, this is an average saving of \$1,500 per lot. As the design progressed further down the catchment, it is expected to remain similarly comparative – although possibly with a reduction in the pit number differences. (It could, however, be argued that if additional pits were required downstream for Q_2 to capture the major flow sufficiently, that longer lintels in the gully pits could be used effectively at much less cost than additional pits.)

6.3 Case 2: Low density, sloping site

For this low density scenario, lot sizes of approximately 630m^2 were used. The Q_5 and Q_2 events were modelled in Case 2, including the major Q_{100} event to check the design criteria and its impact on the minor system. The plans showing the layout and design outcome are included in Appendix B.

Notations have been made on the plans showing when the part of the major surface flows are conveyed in the underground system in the Q_2 scenario to meet the major system criteria, although no upsizing of the pipe size was required at this point as the minor system pipe size was able to handle the additional flow. It is likely that the next pipe reach for Q_2 would require pipe upsizing, and within the next two reaches for Q_5.

6.3.1 Design criteria

The design criteria in Table 9 below were used, in accordance with QUDM:

TABLE 9: CASE 2 DESIGN INFORMATION

	Q_5	Q_2
Time of concentration	13 min	13 min
Fraction impervious	0.65	0.65
Minor runoff coefficient	0.79	0.71
Major runoff coefficient	1.0	1.0
Q_{100} max road flow depth	0.18m*	0.18m
Q_{100} max depth.velocity product	0.4m^2/s	0.4m^2/s

* Maximum flow depth of 180mm was driven by maintaining the d.v factor of 0.4m^2/s rather than the maximum allowable depth of 250mm.

6.3.2 Design results

The designs for each case show that the same pit numbers are required for each scenario, leading to the same number of road crossings. Pipe sizes are consistently a size larger along nearly the entire length of road in the Q_5 scenario. No earthworks to the lots were required. The design was ceased at 500m along the theoretical road where it was considered that adequate comparison results had been given and consistency in the design had been reached. The underground system had reached the point with the Q_2 design where some of the major flow needed to be conveyed within the underground system, and it is expected that the size would need to increase at the next reach. It is expected that the same would be necessary for the Q_5 system two reaches along. The results are included in Table 10 below:

TABLE 10: CASE 2 RESULTS COMPARISON

		Q_5	Q_2
Pit spacings (and road crossings)		Every 5 lots	Every 5 lots
Pit numbers (over 500m)		10	10
Final pipe size		750mm dia.	750mm dia.*
Metres down road when e/works are required to lots		NA	NA
Earthworks (to prevent major event encroachment)		nil	nil
Length of pipes:	375mm	32m	122m
	450mm	90m	90m
	525mm	90m	90m
	600mm	90m	90m
	750mm	180m	90m
Total length of pipes		482m	482m
Cumulative volume of pipes (to indicate overall system size)		$142m^3$	$112m^3$

* Pipe taking part of the major surface flows, no size increased necessary within the designed area.

A calculation of the time of submergence for two pits (one at the head of the system, and one at the downstream end) within this case study was undertaken using a simplified unit hydrograph. Comparison was made between the total time in a Q_{100} event with a Q_5 system and with a Q_2 system.

The results are included in Table 11 below

TABLE 11: CASE 2 Q100 TIME OF SUBMERGENCE

	Q_5	Q_2	Difference
Pit 2/1	15 mins	17.5 mins	2.5 mins
Pit 6/1	14.25 mins	16.5 mins	2.25 mins

The comparison shows an insignificant increase in the time of submergence for each pit in a Q_{100} event as a result of decreasing the design standard to Q_2. At Pit 2/1 (near the head of the underground system) the road is submerged for an additional 2.5 minutes. At Pit 6/1 (near the downstream end of the system within the study boundaries) the road is submerged for an additional 2.25 minutes.

6.3.3 Cost

The design was input into MRC's 'Estimates and Annexures' spreadsheet to produce an estimated construction cost of the pits and pipes. The costs are included in Table 12 below.

TABLE 12: CASE 2 CONSTRUCTION COST COMPARISON

	Q_5	Q_2
Pipe supply and install cost	$252,900	$212,400
Pit supply and install cost	$46,900	$46,900
Earthworks supply and place cost	$0	$0
Total	$299,800	$259,300

The comparison shows approximately 15% higher construction costs for a Q_5 minor stormwater system compared to Q_2. For this case study, with 58 lots, this is an average saving of $700 per lot. The overall drainage costs are much lower than those in Case Study 1, hence the lower saving per lot. As the design progressed further down the catchment, it is expected that the pipe sizes in the Q_2 scenario would be required to be upsized to cater for the additional major flow needed to be captured underground to maintain an acceptable depth.velocity product. It is expected that one reach further on, similar would be needed in the Q_5 scenario. Due to the bypass volumes and velocities, the number of pits is expected to remain similar between both scenarios.

6.4 Case 3: Higher density, flat site

For this higher density scenario, lot sizes of approximately 315m^2 were used (approx. 30 dwlgs/ha), halving the road frontage of the lots in the low density cases. QUDM recommends that densities greater than 20 dwlgs/ha have an underground system designed for Q_{10}. Therefore the current requirement of Q_5 and the proposed requirement of Q_{10} were modelled in Case 3, including the major Q_{100} event to check the design criteria and its impact on the minor system. The plans showing the layout and design outcome are included in Appendix C.

Notations have been made on the plans showing the extent of earthworks required to ensure no encroachment of the major flow event occurs inside the property boundaries. Notations also show when the part of the major surface flows are conveyed in the underground system in the Q_5 scenario to meet the major system criteria, although no upsizing of the pipe size was required at this point as the minor system pipe size was able to handle the additional flow. It is likely that the next pipe reach for Q_5 would require pipe upsizing.

6.4.1 Design criteria

The design criteria in Table 13 below were used, in accordance with QUDM:

TABLE 13: CASE 3 DESIGN INFORMATION

	Q_{10}	Q_5
Time of concentration	10 min	10 min
Fraction impervious	0.85	0.85
Minor runoff coefficient	0.87	0.83
Major runoff coefficient	1.0	1.0
Q_{100} max road flow depth	0.25m	0.25m
Q_{100} max depth.velocity product	$0.4m^2/s$	$0.4m^2/s$

6.4.2 Design results

The designs for each case show that the same pit numbers are required for each scenario, leading to the same number of road crossings. It should be noted that this is specifically related to the boundary locations of the lots, as the pits were located to align with either the boundary or the centre of the lot. The Q_5 scenario would likely result in the pits being spaced further apart than the Q_{10} scenario with alternative boundary locations from intersections, alignment changes, etc.

Pipe sizes are consistently a size (or more) larger along nearly the entire length of road in the Q_{10} scenario. Earthworks to the lots were required sooner in the Q_5 case to prevent major flow encroachment into the lots. The design was ceased at 500m along the theoretical road where it was considered that adequate comparison results had been given and consistency in the design had been reached. The underground system had reached the point with the Q_5 design where some of the major flow needed to be conveyed within the underground system, and it is expected that the size would need to increase at the next reach. It is expected that the same would be necessary for the Q_5 system further down the system, but when that was required is not immediately obvious.

The results are included in Table 14 below:

TABLE 14: CASE 3 RESULTS COMPARISON

		Q_{10}	Q_5
Pit spacings (and road crossings)		Every 3/4 lots	Every 3/4 lots
Pit numbers (over 500m)		28	28
Final pipe size		1350mm dia.	1200mm dia.*
Metres down road when e/works are required to lots		380m	270m
Earthworks (to prevent major event encroachment)		$140m^3$	$355m^3$
Length of pipes:	375mm	88m	88m
	450mm	36m	36m
	525mm	0m	36m
	600mm	36m	27m
	750mm	54m	63m
	825mm	72m	72m
	900mm	36m	108m
	1050mm	108m	72m
	1200mm	108m	72m*
	1350mm	36m	0m
Total length of pipes		575m	575m
Cumulative volume of pipes (to indicate overall system size)		$378m^3$	$310m^3$

* Pipe taking part of the major surface flows, no size increase necessary within the designed area.

6.4.3 Cost

The design was input into MRC's 'Estimates and Annexures' spreadsheet to produce an estimated construction cost of the pits and pipes. The costs are included in Table 15 below.

TABLE 15: CASE 3 CONSTRUCTION COST COMPARISON

	Q_{10}	Q_5
Pipe supply and install cost	$447,300	$385,500
Pit supply and install cost	$138,000	$136,800
Earthworks supply and place cost	$3,500	$8,900
Total	$588,800	$531,200

The comparison shows approximately 10% higher costs for a Q_{10} minor stormwater system compared to a Q_5 system but with a much higher overall cost compared to lower density development. For this case study, with 116 lots, this is an average increase of $500 per lot.

The overall drainage costs are much higher than the other cases, as well as the minimum grade of the road; however there are twice as many lots. As the design progresses further down the catchment, it is expected that the pipe sizes in the Q_5 scenario would be required to be upsized to cater for the additional major flow needed to be captured underground to maintain an acceptable flow depth and width. It is not expected to be needed for a while in the Q_{10} scenario and the pit numbers are expected to remain the same; however, the pit spacing for the Q_{10} case was at the absolute limit, whilst there was still a degree of flexibility for Q_5.

6.5 Summary and Discussion

The following results can be observed from the three case studies undertaken in Table 16 below:

TABLE 16: SUMMARY OF CASE STUDY RESULTS

	Case 1 (low density, flat)		Case 2 (low density, sloping)		Case 3 (high density, flat)	
	Q_5	Q_2	Q_5	Q_2	Q_5	Q_{10}
Pit spacing	2.5 lots	3 lots	5 lots	5 lots	2 lots	2 lots
Pipe length	555m	534m	481.5m	481.5m	575m	575m
Cumulative pipe volume	281m^3	207m^3	142m^3	112m^3	310m^3	378m^3
Largest pipe size	1200mm dia	1050mm dia	750mm dia	750mm dia	1050mm dia	1200mm dia
Earthworks	250m^3	450m^3	nil	nil	140m^3	355m^3
Overall cost	$472,700	$385,600	$299,800	$259,300	$531,200	$588,800
Cost saving/increase	20% saving ($1,500/lot)		15% saving ($700/lot)		10% increase ($500/lot)	
Max. time of submergence (Q_{100})	15 mins	17 mins	15 mins	17.5 mins	N/A	N/A
Increased time of submergence	2 mins		2.5 mins		N/A	

It can be seen that the most significant cost saving by reducing to Q_2 is achieved in Case 1 on flatter sites, which are traditionally more expensive and more difficult to drain. Over the course of the 58 lots, the saving amounted to an average of $1,500 per lot. The saving per lot did decrease in Case 2 for the sloping site, where the overall drainage is generally cheaper and easier to achieve. The resulting saving was $700/lot over the 58 lots. It is estimated that the average construction cost for lots of similar size to those in the Case Studies is in the order of $50,000 to $70,000 per lot, resulting in a saving of approximately 2-3% for flat sites, and 1-1.5% for sloping sites.

Case 3 looked at the increase in cost by changing to Q_{10} from the current Q_5, and resulted in an increase of $500/lot over the 116 lots that are half the size of the lots in the first two cases. It is estimated that the average construction cost for lots of similar size is $40,000 per lot, resulting in an increase of approximately 1.5%.

The majority of the cost saving for Cases 1 and 2 is in the pipework, due to the decreased sizes to cater for the lower flows (as demonstrated by the cumulative pipe volume); however, depending on lot frontages, where pit frequencies can be reduced in the Q_2 situation there are significant possible savings. It can be seen that in Case 1, the pits were able to be further apart, reducing the number of pits, the number of road crossings and ultimately the total pipe length. Pits are a comparatively large component of the cost per unit, and any reduction in pit numbers will decrease construction cost. Maintenance is also most prevalent on pits and road crossings, and so maintenance cost will also benefit from reduced pit numbers.

In real life situations intersections, alignment changes and vertical grade changes may require pits at a higher frequency that otherwise needed for hydraulic purposes. However a direct comparison in those situations between Q_5 and Q_2 – particularly for flat sites – is still expected to yield an overall pit number reduction. For sloping sites and high density sites, the difference is less noticeable, but will still depend on the specific situation. It is important to note that the cost analysis was done in a simplistic manner over the entire catchment within each Case Study. In a larger development, lots further downstream in a catchment may not see much of a cost saving (if any), and other factors impacting on the drainage design may be applicable.

Smaller pipe sizes have a lower capital cost, and also a lower maintenance cost when it comes to relining. Asset renewal cost is obviously also lower for smaller pipes.

There will be an increase in the level of nuisance to local residents, with an increase in the time that the road is flooded in any event that exceeds the minor system capacity. In these Case Studies, the worst case is an increase from 15 minutes to 17.5 minutes in Case 2 at the top of the catchment, which is considered insignificant.

7. Applicability

The benefits of a reduction from Q_5 to Q_2 will only be appreciated if the policy is applied in the correct situations. The following considerations should be made:

1. "No worsening":
   There should be no worsening of any existing areas or systems, thereby requiring the replacement or renewal of an existing system to be done with a system of equal or greater immunity. For example, the replacement of a system in East Mackay that currently has Q_1 capacity with a new system of Q_2 capacity is appropriate; a system in Andergrove that was designed to previous Q_5 standards will need to be replaced with the same (even though that may not be to current Q_5 standards given the current fraction impervious and time of concentration figures that are used);

2. "Infill development":
   When undertaking infill development, consideration needs to be given to existing upstream and downstream systems to ensure an appropriate level of service continues to be achieved by both. The discharge location of the development will be a factor, and if a lower level of immunity for the minor system is proposed, justification needs to be provided that there will be no problems caused either upstream or downstream;

3. "Higher density" increase to Q_{10}:
   As highlighted in this discussion paper, the current QUDM standard for residential densities greater than 20dwlgs/ha is not currently required by MRC. It is noted that this requirement has existed within QUDM since the first volume released in 1994. Whilst included in the case studies above for the purpose of consistency and comparison, further investigation should be undertaken to determine its applicability within the Mackay region. Issues include
   - determining when a development is considered to have a density greater than 20 dwlgs/ha (ie is it when the average lot size is 500m^2 or less, or when there are more than 20 dwellings in a site greater than a hectare in size, is it not considered when the site is less than a hectare in size);
   - considering the development as a whole if parts of it are higher density (considering that the underground systems will be interconnected, and that a small upstream pocket of Q_{10} would need to drain through a much larger part of the catchment of Q_5);
   - how to deal with downstream systems that may only be designed to Q_5, if part of the development will be designed to Q_{10};
   - the benefits in applying a higher degree of immunity for higher density sites;
   - increased capital and maintenance costs (thereby going against the purpose of this proposed reduction from Q_5 to Q_2);
   - how to deal with detention requirements for higher density infill development, or infill development in higher density areas;
   - confirming that the standard will apply to both private and public systems.

4. “Interallotment drainage systems”:
   The design of interallotment drainage systems should continue per the current standards until a review of the engineering design guidelines can be undertaken.

8. Risk assessment

To properly acknowledge the risks associated with this proposal, a brief risk assessment was undertaken using Council's Risk Matrix, shown in Table 17 below:

TABLE 17: TYPICAL RISK MATRIX

Likelihood	Consequence				
	Insignificant	**Minor**	**Moderate**	**Major**	**Catastrophic**
Rare	Low (1)	Low (2)	Medium (3)	High (4)	High (5)
Unlikely	Low (2)	Low (4)	Medium (6)	High (8)	Extreme (10)
Possible	Low (3)	Medium (6)	High (9)	Extreme (12)	Extreme (15)
Likely	Medium (4)	High (8)	High (12)	Extreme (16)	Extreme (20)
Almost certain	Medium (5)	High (10)	Extreme (15)	Extreme (20)	Extreme (25)

The risks of implementing the reduced standard were assessed using the broad categories of Environmental, Economic, Social/Reputation, Stakeholder Service levels, Public Health and Workplace Health and Safety (including public safety). Due to the nature of the proposal (as it is not a 'typical' project with the usual risks), many of the usual classifications could not be assigned, as the likelihood and consequences aren't directly measurable. The identified risks are shown in Table 18 below:

TABLE 18: PROJECT RISKS

Driver	Issue	Likelihood	Consequence	Risk
Environment	No permits, approvals or involvement required by external governing bodies (to introduce the reduction)	Rare	Insignificant	Low (1)
	No measureable impact on the environment i.e. noise, fumes, odour or dust emissions (as a result of the reduced standard)			
Economic	Local designers/developers submit applications for DA/OW approval using the 'old' standard requiring re-work if they wish to adopt the 'new' standard	Unlikely	Moderate	Medium (6)
	Residents are affected by the water in the road and choose not to leave home to work/shop/do business	Rare	Minor	Low (2)
Social	Community concern (including contacting Councillors and media) over potential flooding and damage to their property due to perception of reduced flood standards	Possible	Minor	Medium (6)
Stakeholder Service Levels	No impact or disruption to service or systems, other than that identified in other categories (no stakeholders other than general public)	Rare	Insignificant	Low (1)
Public Health	No impact on public health	Rare	Insignificant	Low (1)
WH&S	Risk of injury/lost time due to extra depth of water for longer periods (from minor slips through to traffic accidents)	Rare to Possible	Minor to Catastrophic	Medium (6) to High (5)

In order to manage the risks posed by the above issues, the mitigation measures as shown in Table 19 below are proposed:

TABLE 19: PROPOSED MITIGATION MEASURES AND RESULTING RISKS

Issue	Initial Risk	Action	Resulting Risk
Economic: Designers/developers submit applications for DA/OW approval using the 'old' standard requiring re-work if they wish to adopt the 'new' standard	Medium (6)	The change to the policy will require an amendment to the planning scheme, via the usual process (including public notification). Designers and developers working in the local area are notified of planning scheme amendments. An information bulletin will be sent to designers/developers/UDIA in the local area, via a list collated from those who have signed up as well as those who have had dealings in the region in recent years. Assessment Officers will also be requested to communicate the new standard in pre-lodgement meetings and communication.	Low (4)
Social: Community concern (including contacting Councillors and media) over potential flooding and damage to their property due to perception of reduced flood standards	Medium (6)	A community engagement plan will be completed to ensure correct information is given to residents who have concern. Information will include facts on major/minor system, damaging vs nuisance flooding, and how the policy will apply – only greenfield sites, not reconstruction or existing areas. No commercial areas will be affected, as it is only applicable to residential areas.	Low (3)
WH&S: Risk of injury/lost time from minor slips through to traffic accidents, due to extra depth of water in the roads for longer periods	Medium (6) to High (5)	No mitigation measures are possible – personal safety measures are assumed to be adopted by individuals when crossing the road, driving a car, etc when there is water in the road, regardless of the design standard. The extra depth of water and additional time of inundation is insignificant and will not be measurable by the community.	Medium (6) to High (5)

A summary of the proposed mitigation measures is below, assuming that the reduced standard is adopted:

1. Make the amendment to the Planning Scheme Policy via the required process, including public notification and associated media release;
2. Issue an Information Bulletin to industry (including the UDIA) notifying them of the reduced standard;
3. Request that assessment officers communicate the change in pre-lodgement discussions with designers and developers;
4. Prepare a Community Engagement Plan to ensure accurate information is issued to the public regarding the change and its applicability only to the minor system and nuisance flooding, as well as the magnitude of the impact.

9. Conclusions and Recommendations

Mackay Regional Council has identified the importance of achieving a balance between the critical areas of level of service, economy, and growth. It was recognised that a greater balance between economy and level of service may be achievable within the stormwater drainage system, by reducing the design standard from the current Q_5 requirement to the QUDM recommendation of Q_2. As a result of this investigation into the possible reduction of the minor underground stormwater system standards, the following key outcomes have been identified:

1. Maintain an acceptable level of service to the community with regards to the level and frequency of inundation and nuisance during minor and major storm events (*Level of Service)*;
2. Ensure there is a 'no worsening' effect on existing areas (*Level of Service*);
3. Reduce capital and asset renewal costs of stormwater pit and pipe infrastructure (*Economy*);
4. Reduce maintenance costs of stormwater pit and pipe infrastructures (*Economy*);
5. Align the region with current industry practices for the design storm events and standardise the design standards across the region (*Growth*);
6. Assist with reducing the impacts of increased density within new developments on stormwater infrastructure costs *(Growth and Economy)*.

Whilst reviewing QUDM as part of this paper, it was found that QUDM recommends that underground stormwater drainage systems be designed to cater for a Q_{10} event (10% AEP) for densities of 20dwlgs/ha or greater. Mackay will continue to experience increased density of developments in the future, therefore this density classification needs to be considered. When considering two of the most high density developments in recent times, however, one just exceeded the 20 dwlgs/ha (although was only 4.3ha in size) and one didn't. It is therefore not considered likely that there will be a high number of developments of this density in the foreseeable future.

Following the literature review of QUDM and other local Councils, preparing a number of case studies and analysing the outcomes, discussions with various members of Development Engineering, Strategic Planning and Civil Operations, and undertaken a Risk Assessment on the implementation of the standard, the following recommendations are made:

1. Low density residential areas:
    a. Reduce the minor system design storm event standard from the current 18% AEP (Q_5) to the proposed 39% AEP (Q_2), by amending the stormwater drainage design planning scheme policy;
    b. Develop guidelines to specify when the reduction is applicable, to ensure no worsening of existing areas or systems;
    c. Ensure infill developments are treated properly depending on the upstream and downstream situations, and the discharge location and proximity;

d. Develop transitional arrangements for the change with the development industry; and
e. Maintain current design standards for interallotment drainage systems until a review of these systems can be undertaken.

2. Higher density residential areas:
   a. Investigate whether to apply the increased requirement for Q_{10} to densities greater than 20 dwlgs/ha;
   b. Consider the overall purpose of requiring a higher level of immunity to more dense developments;
   c. Develop guidelines to specify when a development is considered achieve greater than 20 dwlgs/ha for stormwater drainage purposes, considering that:
      i. It is unlikely that this density will be achieved over an entire development site of reasonable size in the foreseeable future;
      ii. It is not practical to apply the requirement to small 'pockets' of high density within a larger development, particularly when the higher density site drains through an area of lower density;
      iii. The location of the outlet will greatly affect the applicability;
      iv. Whether the system will discharge into an existing or lower-immunity system; and
      v. Detention may be required in addition to a new underground system.

3. Documentation and design:
   a. Produce a Community Engagement Plan to ensure accurate information is available to the public should there be any concerns raised about risk to properties or individuals;
   b. Issue an Information Bulletin to industry advising them of the change, once the appropriate process has been followed for changing the planning scheme policy;
   c. Produce guidelines or design examples showing the minimum required level of documentation to accompany a stormwater design, to allow development assessment officers to be consistent and effective. Following discussions with Engineering Assessment Officers within Development Engineering, these should include, at a minimum:
      i. Plan view showing visual shading of flooded width, flows in the culvert and flows above ground, and depth.velocity product at critical locations;
      ii. HEC-RAS tables, or equivalent for other programs;
      iii. HEC-RAS cross-sections, or equivalent for other programs;
      iv. Separate minor and major catchment plans; and
      v. Single page stormwater design report, outlining assumptions and criteria.
   d. Amend the Engineering Design Guidelines to accurately reflect the current recommendations of QUDM (taking care to ensure references will remain applicable in future QUDM revisions), to form PSP SC6.12-10 Engineering

Design Guideline – Stormwater Drainage Design in the new Mackay Region Planning Scheme;

e. Revise the typical road hierarchy cross-sections to include the newly adopted standards; and

f. Ensure consistent terminology is used throughout the various guidelines and documents to reflect the new preferred terminology (outlined in Section 1.1).

4. Maintenance and asset renewal:

   a. Consider how to improve the quality of newly constructed stormwater systems to assist in reducing the maintenance and renewal costs, as this investigation highlighted the high cost of maintenance and asset renewal as a result of poor construction standards;

   b. Consider reviewing construction specifications for stormwater systems, focussing on pipe joints and pit connections to reduce the instances of joint and connection failures, contributing to high maintenance costs.

10. References

Australian Rainfall & Runoff (ARR)
Pilgrim, DH, (ed)., *Australian Rainfall & Runoff – A Guide to Flood Estimation,* Institution of Engineers Australia, Barton, ACT, 1987.

Draft Mackay Region Planning Scheme (DMRPS)
Mackay Regional Council, *Draft Mackay Region Planning Scheme,* Mackay Regional Council, Mackay, Qld, 2013.

Draft Residential Densities Strategy (DRDS)
Mackay Regional Council, AECOM, BVN Architecture & Foresight Partners, *draft Residential Densities Strategy,* Mackay Regional Council, Mackay, Qld, 2011.

Regional Sustainability Strategy (RSS)
Mackay Regional Council, *Regional Sustainability Strategy, RSS Final Report: Our Alternative Future,* Mackay Regional Council, Mackay, Qld, 2014.

Storm Drainage Design in Small Urban Catchments (SDDSUC)
Argue, JRK (FIEAust), *Storm Drainage Design in Small Urban Catchments: A Handbook for Australian Practice*, The Australian Road Research Board, Vermont South, Victoria, 1986.

Queensland Urban Drainage Manual (QUDM)
Queensland Department of Energy and Water Supply., *Queensland Urban Drainage Manual Third Edition.* Queensland Department of Energy and Water Supply, Brisbane, Qld, 2013.

Urban Development Institute of Australia (UDIA), The UDIA (Qld) Industry Insights Report
UDIA (Qld) Research Foundation & The National Property Research Co., *The UDIA (Qld) Industry Insights Report,* The Urban Development Institute of Australia (Qld), Brisbane, 2015.

Appendix A
Case Study 1 (low density, flat site)

DRAINAGE DESIGN PARAMETERS

DESIGN AEP (MINOR)	-	39% (1 IN 2 ANNUAL CHANCE)
DESIGN AEP (MAJOR)	-	1% (1 IN 100 ANNUAL CHANCE)
TIME OF CONCENTRATION (Tc)	-	15 min
FRACTION IMPERVIOUS (fi)	-	0.65
RUNOFF COEFFICIENT (39% AEP)	-	0.71
RUNOFF COEFFICIENT (1% AEP)	-	1.0
100 YR ARI ROAD FLOW DEPTH (MAX.)	-	250 mm
100YR ARI DEPTH x VELOCITY (d.V)	-	0.4 m^2/s

LAYOUT DETAILS

TYPICAL LOT SIZE	-	18m x 35m, 630m²
SCENARIO ROAD LENGTH	-	APPROX. 500m

\# ADDITIONAL ALLOTMENT FILLING REQUIREMENT TO CATER FOR MAJOR ROAD FLOWS (250mm MAX FLOW DEPTH)

* PIPE SIZE INCREASED TO CATER FOR MAJOR FLOW REQUIREMENTS

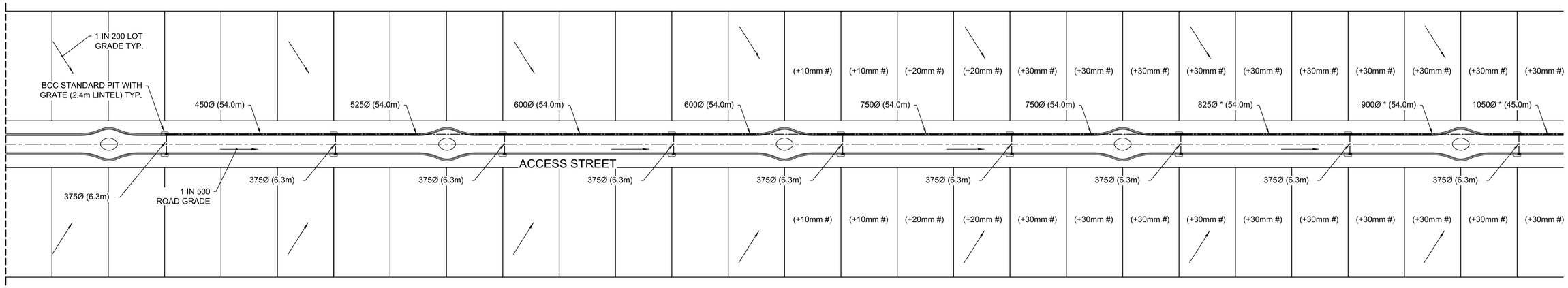

39% AEP (1 IN 2 ANNUAL CHANCE) DRAINAGE SCENARIO
(CURRENT QUDM)

DRAINAGE DESIGN PARAMETERS

DESIGN AEP (MINOR)	-	18% (1 IN 5 ANNUAL CHANCE)
DESIGN AEP (MAJOR)	-	1% (1 IN 100 ANNUAL CHANCE)
TIME OF CONCENTRATION (Tc)	-	15 min
FRACTION IMPERVIOUS (fi)	-	0.65
RUNOFF COEFFICIENT (18% AEP)	-	0.79
RUNOFF COEFFICIENT (1% AEP)	-	1.0
100 YR ARI ROAD FLOW DEPTH (MAX.)	-	250 mm
100YR ARI DEPTH x VELOCITY (d.V)	-	0.4 m^2/s

LAYOUT DETAILS

TYPICAL LOT SIZE	-	18m x 35m, 630m²
SCENARIO ROAD LENGTH	-	APPROX. 500m

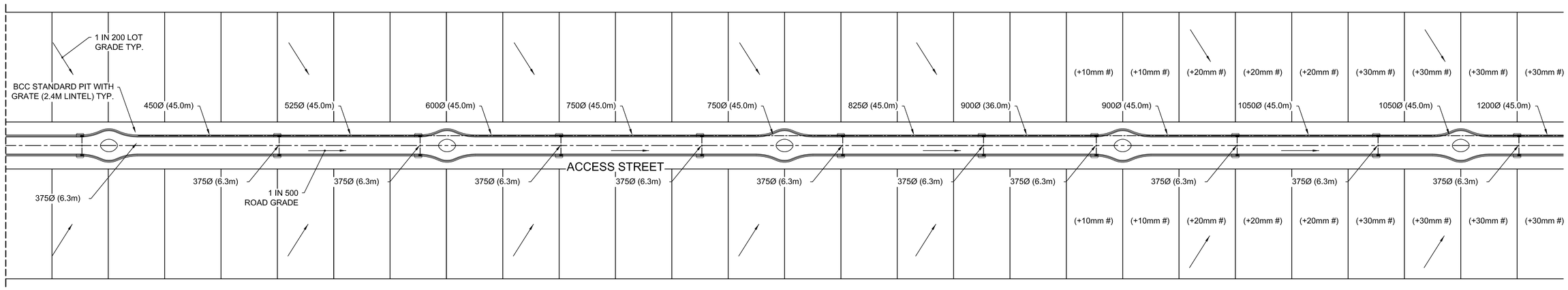

18% AEP (1 IN 5 ANNUAL CHANCE) DRAINAGE SCENARIO
(CURRENT MRC)

TO BE READ IN CONJUNCTION WITH DISCUSSION DOCUMENT ON MINOR STORMWATER SYSTEM STANDARDS FOR RESIDENTIAL DEVELOPMENT ONLY - NOT A STAND-ALONE PLAN

NO.	DATE	DESCRIPTION	DRAWN	APPROVED
A	30/06/15	ISSUED WITH DISCUSSION DOCUMENT	JPM	-

AMENDMENTS AND REVISIONS

SURVEY	SCALES (A1)		
SURVEY FILE No	N.T.S.		
LEVEL DATUM A.H.D.			
MERIDIAN			
FILE NAME \MISC\SCENARIO DEVELOPMENT\A1-27741			

DRAWN J. MCGARRY	SIGNED JPM	DATE 30/06/15
DESIGNED J. MCGARRY	SIGNED JPM	DATE 30/06/15
CHECKED C. BECKER	SIGNED CMB	DATE 30/06/15
MANAGER TECHNICAL SERVICES NOT APPLICABLE G. HAWES		DATE

DIRECTOR ENGINEERING AND COMMERCIAL INFRASTRUCTURE
NOT APPLICABLE
JASON DEVITT
DATE

Mackay REGIONAL COUNCIL

Q100 DRAINAGE SCENARIOS
39% AEP AND 18% AEP WITH 1 IN 500 ROAD GRADES
LOW DENSITY RESIDENTIAL DEVELOPMENT

SHEET 1 OF 3
WORKS JOB No.
DRAWING No. A1-27741
AMEND. A

Appendix B
Case Study 2 (low density, sloping site)

DRAINAGE DESIGN PARAMETERS

DESIGN AEP (MINOR)	-	39% (1 IN 2 ANNUAL CHANCE)
DESIGN AEP (MAJOR)	-	1% (1 IN 100 ANNUAL CHANCE)
TIME OF CONCENTRATION (Tc)	-	13 min
FRACTION IMPERVIOUS (fi)	-	0.65
RUNOFF COEFFICIENT (39% AEP)	-	0.71
RUNOFF COEFFICIENT (1% AEP)	-	1.0
100 YR ARI ROAD FLOW DEPTH (MAX.)	-	180 mm
100YR ARI DEPTH x VELOCITY (d.V)	-	0.4 m^2/s

LAYOUT DETAILS

TYPICAL LOT SIZE	-	18m x 35m, 630m²
SCENARIO ROAD LENGTH	-	APPROX. 500m

* PART MAJOR SURFACE FLOWS CONVEYED IN PIPE SYSTEM

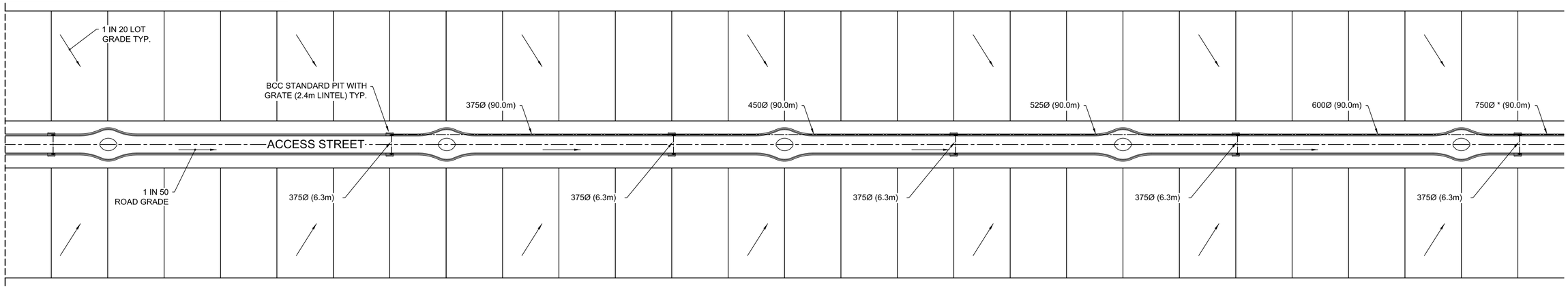

39% AEP (1 IN 2 ANNUAL CHANCE) DRAINAGE SCENARIO (CURRENT QUDM)

DRAINAGE DESIGN PARAMETERS

DESIGN AEP (MINOR)	-	18% (1 IN 5 ANNUAL CHANCE)
DESIGN AEP (MAJOR)	-	1% (1 IN 100 ANNUAL CHANCE)
TIME OF CONCENTRATION (Tc)	-	13 min
FRACTION IMPERVIOUS (fi)	-	0.65
RUNOFF COEFFICIENT (18% AEP)	-	0.79
RUNOFF COEFFICIENT (1% AEP)	-	1.0
100 YR ARI ROAD FLOW DEPTH (MAX.)	-	180 mm
100YR ARI DEPTH x VELOCITY (d.V)	-	0.4 m^2/s

LAYOUT DETAILS

TYPICAL LOT SIZE	-	18m x 35m, 630m²
SCENARIO ROAD LENGTH	-	APPROX. 500m

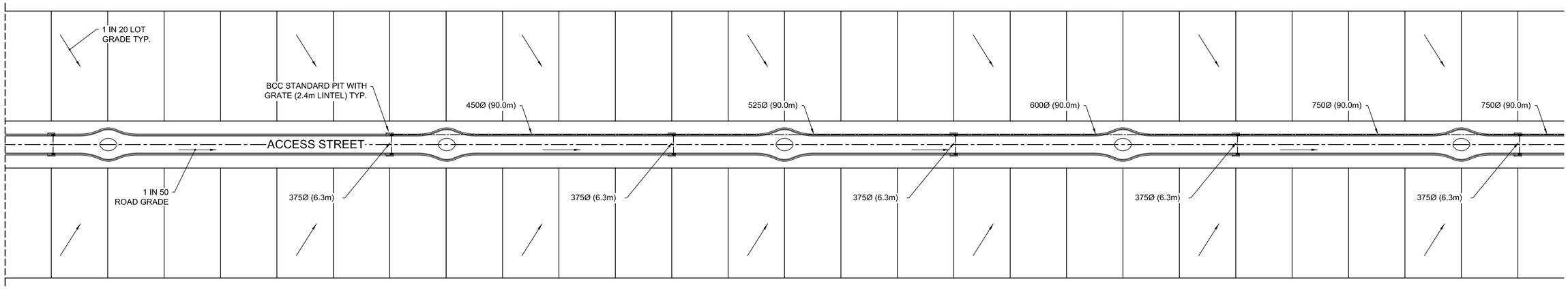

18% AEP (1 IN 5 ANNUAL CHANCE) DRAINAGE SCENARIO (CURRENT MRC)

TO BE READ IN CONJUNCTION WITH DISCUSSION DOCUMENT ON MINOR STORMWATER SYSTEM STANDARDS FOR RESIDENTIAL DEVELOPMENT ONLY - NOT A STAND-ALONE PLAN

NO.	DATE	DESCRIPTION	DRAWN	APPROVED
A	30/06/15	ISSUED WITH DISCUSSION DOCUMENT	JPM	-

AMENDMENTS AND REVISIONS

SURVEY	SCALES (A1)		
SURVEY FILE No	N.T.S.		
LEVEL DATUM A.H.D.			
MERIDIAN			
FILE NAME \MISC\SCENARIO DEVELOPMENT\A1-27742.DWG			

DRAWN J. MCGARRY	SIGNED JPM	DATE 30/06/15
DESIGNED J. MCGARRY	SIGNED JPM	DATE 30/06/15
CHECKED C. BECKER	SIGNED CMB	DATE 30/06/15
MANAGER TECHNICAL SERVICES NOT APPLICABLE G. HAWES		DATE

DIRECTOR ENGINEERING AND COMMERCIAL INFRASTRUCTURE
NOT APPLICABLE
JASON DEVITT
DATE

Mackay REGIONAL COUNCIL

Q100 DRAINAGE SCENARIOS

39% AEP AND 18% AEP WITH 1 IN 50 ROAD GRADES
LOW DENSITY RESIDENTIAL DEVELOPMENT

SHEET 2 OF 3
WORKS JOB No.
DRAWING No. A1-27742
AMEND. A

Appendix C
Case Study 3 (high density, flat site)

DRAINAGE DESIGN PARAMETERS

DESIGN AEP (MINOR)	-	10% (1 IN 10 ANNUAL CHANCE)
DESIGN AEP (MAJOR)	-	1% (1 IN 100 ANNUAL CHANCE)
TIME OF CONCENTRATION (Tc)	-	10 min
FRACTION IMPERVIOUS (fi)	-	0.85
RUNOFF COEFFICIENT (10% AEP)	-	0.87
RUNOFF COEFFICIENT (1% AEP)	-	1.0
100 YR ARI ROAD FLOW DEPTH (MAX.)	-	250 mm
100YR ARI DEPTH x VELOCITY (d.V)	-	0.4 m^2/s

LAYOUT DETAILS

TYPICAL LOT SIZE	-	9m x 35m, 315m²
SCENARIO ROAD LENGTH	-	APPROX. 500m

ADDITIONAL ALLOTMENT FILLING REQUIREMENT TO CATER FOR MAJOR ROAD FLOWS (250mm MAX FLOW DEPTH)

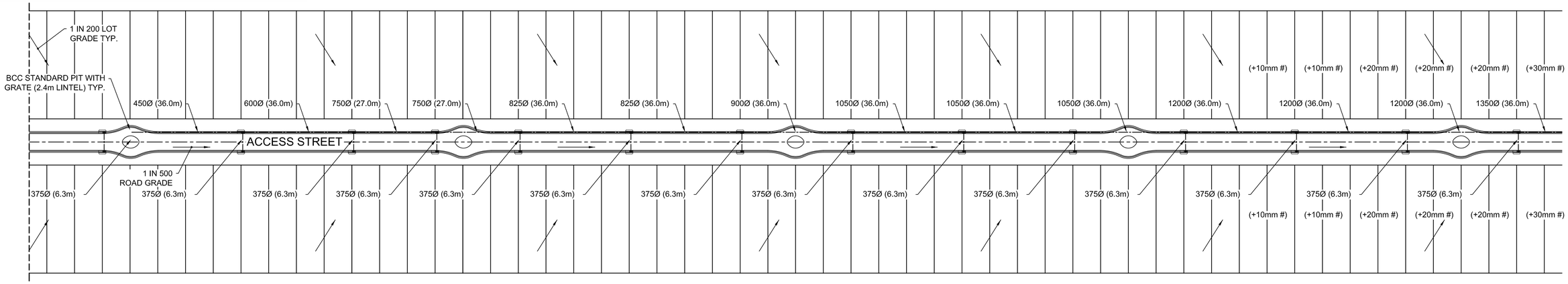

10% AEP (1 IN 10 ANNUAL CHANCE) DRAINAGE SCENARIO
(CURRENT QUDM)

DRAINAGE DESIGN PARAMETERS

DESIGN AEP (MINOR)	-	18% (1 IN 5 ANNUAL CHANCE)
DESIGN AEP (MAJOR)	-	1% (1 IN 100 ANNUAL CHANCE)
TIME OF CONCENTRATION (Tc)	-	10 min
FRACTION IMPERVIOUS (fi)	-	0.85
RUNOFF COEFFICIENT (18% AEP)	-	0.83
RUNOFF COEFFICIENT (1% AEP)	-	1.0
100 YR ARI ROAD FLOW DEPTH (MAX.)	-	250 mm
100YR ARI DEPTH x VELOCITY (d.V)	-	0.4 m^2/s

LAYOUT DETAILS

TYPICAL LOT SIZE	-	9m x 35m, 315m²
SCENARIO ROAD LENGTH	-	APPROX. 500m

ADDITIONAL ALLOTMENT FILLING REQUIREMENT TO CATER FOR MAJOR ROAD FLOWS (250mm MAX FLOW DEPTH)

* PART MAJOR SURFACE FLOWS CONVEYED IN PIPE SYSTEM

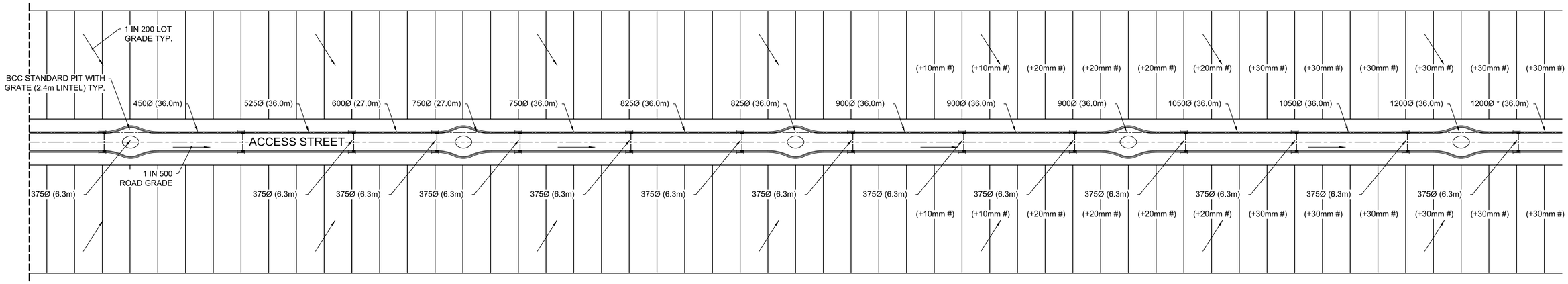

18% AEP (1 IN 5 ANNUAL CHANCE) DRAINAGE SCENARIO
(CURRENT MRC)

TO BE READ IN CONJUNCTION WITH DISCUSSION DOCUMENT ON MINOR STORMWATER SYSTEM STANDARDS FOR RESIDENTIAL DEVELOPMENT ONLY - NOT A STAND-ALONE PLAN

NO.	DATE	DESCRIPTION	DRAWN	APPROVED
A	30/06/15	ISSUED WITH DISCUSSION DOCUMENT	JPM	-

AMENDMENTS AND REVISIONS

SURVEY		SCALES (A1)	N.T.S.
SURVEY FILE No			
LEVEL DATUM	A.H.D.		
MERIDIAN			
FILE NAME \MISC\SCENARIO DEVELOPMENT\A1-27743			

DRAWN J. MCGARRY	SIGNED JPM	DATE 30/06/15
DESIGNED J. MCGARRY	SIGNED JPM	DATE 30/06/15
CHECKED C. BECKER	SIGNED CMB	DATE 30/06/15

MANAGER TECHNICAL SERVICES
NOT APPLICABLE
G. HAWES DATE

DIRECTOR ENGINEERING AND COMMERCIAL INFRASTRUCTURE
NOT APPLICABLE
JASON DEVITT
DATE

Mackay REGIONAL COUNCIL

Q100 DRAINAGE SCENARIOS
10% AEP AND 18% AEP WITH 1 IN 500 ROAD GRADES
MEDIUM DENSITY RESIDENTIAL DEVELOPMENT

SHEET 3 OF 3
WORKS JOB No.
DRAWING No. A1-27743
AMEND. A

Appendix D

Calculations tables for Case Studies

LOCATION					TIME		SUB-CATCHMENT RUNOFF						INLET DESIGN							DRAIN DESIGN													HEADLOSSES										PART FULL DESIGN LEVELS							
						tc	I	C10	C	A	C×A	+CA	Q					Qg	Qb		tc	I	+CA	Qt	Qm	Qs	Qp	L	S		V	T			V2/2g	Ku	hu	Kl	hl	Kw	hw	Sf	hf		Vp							
DESIGN ARI	STRUCTURE No.	DRAIN SECTION	SUB-CATCHMENTS CONTRIBUTING	LAND USE	SLOPE OF CATCHMENT	SUB-CATCHMENT TIME OF CONC.	RAINFALL INTENSITY	10yr RUNOFF CO-EFFICIENT	CO-EFFICIENT OF RUNOFF	SUB-CATCHMENT AREA	EQUIVALENT AREA	SUM OF (C x A)	SUB-CATCHMENT DISCHARGE	FLOW IN K&C (INC. BYPASS)	ROAD GRADE AT INLET	MINOR FLOW ROAD CAPACITY	INLET TYPE	FLOW INTO INLET	BYPASS FLOW	BYPASS STRUCTURE No.	CRITICAL TIME OF CONC.	RAINFALL INTENSITY	TOTAL (C x A)	MAJOR TOTAL FLOW	MAJOR SURFACE FLOW CAPACITY	MAJOR SURFACE FLOW	PIPE FLOW	REACH LENGTH	PIPE GRADE	PIPE / BOX DIMENSIONS (CLASS)	FLOW VELOCITY FULL (PIPE GRADE VELOCITY)	TIME OF FLOW IN REACH	STRUCTURE CHART No.	STRUCTURE RATIOS FOR 'K' VALUE CALCULATIONS	VELOCITY HEAD	U/S HEADLOSS COEFFICIENT	U/S PIPE STRUCT. HEADLOSS	LAT. HEADLOSS CO-EFFICIENT	LAT. PIPE STRUCT. HEADLOSS	W.S.E CO-EFFICIENT	CHANGE IN W.S.E	PIPE FRICTION SLOPE	PIPE FRICTION HEADLOSS (L x Sf)	DEPTH	VELOCITY	OBVERT LEVELS	DRAIN SECTION H.G.L	UPSTREAM H.G.L	LAT. H.G.L	W.S.E.	SURFACE OR K&C INVERT LEVEL	STRUCTURE No.
yrs					%	min	mm/h			ha	ha	ha	l/s	l/s	%	l/s		l/s	l/s		min	mm/h	ha	l/s	l/s	l/s	l/s	m	%	mm	m/s	min			m		m		m		m	%	m	m	m/s	m	m	m	m	m	m	
5 100	11	11 to 21	11			15.00 15.00	138 236		0.79 1.00	0.202 0.202	0.160 0.202	0.160 0.202	61 132	61 FLOW	0.20 WIDTH/DEPTH	65 2.650Wd	7 m	61	0	12	15.00 15.00	138 236	0.160 0.202	132		(Pipe	61 flow=	6.326 Grate	0.63 flow)	375(2	0.55 (1.26)	0.11			0.015	1.80	0.027			1.80	0.027	0.12	0.008			5.425 5.385	5.882 5.874	5.909		5.909	6.050	11
5 100	21	21 to 31	11;21			15.00 15.00	138 236		0.79 1.00	0.202 0.202	0.160 0.202	0.160 0.202	61 132	61 FLOW	0.20 WIDTH/DEPTH	65 2.650Wd	7 m	61	0	31	15.11 15.11	138 235	0.320 0.404	264	1284	(Pipe	142 flow=	122 Sum	45.000 upstr	0.20 atten	450(2 flows)	0.77 (0.80)	0.75		Qg 0.061 Qa 0.122 Do 450 Angle 90 Chart 47 S/Do 2.5 chartdeg Du/Do 0.83 K0 2.07 K0.5 2.30 Qu/Qo 0.50 Cg 1.00 K 2.30 S/Do 2.5 K0 2.07 K0.5 2.30 K 2.30 S/Do 2.0 K0 2.48 K0.5 2.40 K 2.40	0.030	2.02	0.061	Interp	val for	2.38 S/Do	0.071 2.10	0.18 Kw	0.083 2.38			5.390 5.380	5.813 5.730	5.874		5.884	6.050	21
5 100	12	12 to 31	12			15.00 15.00	138 236		0.79 1.00	0.191 0.191	0.151 0.191	0.151 0.191	58 125	58 FLOW	0.20 WIDTH/DEPTH	65 2.592Wd	7 m	58	0	13	15.00 15.00	138 236	0.151 0.191	125		(Pipe	58 flow=	6.326 Grate	0.63 flow)	375(2	0.53 (1.26)	0.11		Qg 0.058 Qa 0.058 Do 375 CHRT 32: Vo2/2gDo 0.04 H/Do 1.07 Kg side flow 5.67 end flow 4.28	0.014	5.67	0.081			5.67	0.081	0.11	0.007			5.335 5.295	5.737 5.730	5.818		5.818	5.960	12
5 100	31	31 to 41	11;21;12;31			15.00 15.00	138 236		0.79 1.00	0.191 0.191	0.151 0.191	0.151 0.191	58 125	58 FLOW	0.20 WIDTH/DEPTH	65 2.592Wd	7 m	58	0	41	15.86 15.86	135 230	0.622 0.786	502	1284	(Pipe	269 flow=	233 Sum	45.000 upstr	0.20 atten	525(2 flows)	1.04 (0.90)	0.72		Qg 0.057 Qa 0.233 Do 525 Routine 2.2 CHART 48 Du/Do 0.86 Qu/Qo 0.51 K 1.27 d/Do 2.0 chrt Qg/Qo 0.24 Kg 0.34 d/Do 1.5 chrt Qg/Qo 0.24 Kg 0.40 d/Do 1.61 Interp value Kg 0.39 Ku=Kw= 1.66 Combined pipes in Line case Join Pipes:	0.055	1.66	0.091	12 and Vel1	21 0.750	1.66 Vel2	0.091 0.514	0.27 Eq Dia	0.121 576 Angle	151 Flow	0.176			5.314 5.224	5.639 5.518	5.730		5.730	5.960	31
5 100	13	13 to 41	13			15.00 15.00	138 236		0.79 1.00	0.191 0.191	0.151 0.191	0.151 0.191	58 125	58 FLOW	0.20 WIDTH/DEPTH	65 2.592Wd	7 m	58	0	14	15.00 15.00	138 236	0.151 0.191	125		(Pipe	58 flow=	6.326 Grate	0.63 flow)	375(2	0.53 (1.26)	0.11		Qg 0.058 Qa 0.058 Do 375 CHRT 32: Vo2/2gDo 0.04 H/Do 0.75 Kg side flow 6.89 end flow 5.05	0.014	6.89	0.099			6.89	0.099	0.11	0.007			5.245 5.205	5.525 5.518	5.624		5.624	5.870	13
5 100	41	41 to 51	11;21;12;31;1 3;41			15.00 15.00	138 236		0.79 1.00	0.191 0.191	0.151 0.191	0.151 0.191	58 125	58 FLOW	0.20 WIDTH/DEPTH	65 2.592Wd	7 m	58	0	51	16.58 16.58	132 226	0.924 1.168	733	1284	(Pipe	395 flow=	339 Sum	45.000 upstr	0.20 atten	600(2 flows)	1.16 (0.98)	0.65		Qg 0.055 Qa 0.339 Do 600 Routine 2.2 CHART 48 Du/Do 0.88 Qu/Qo 0.67 K 0.83 d/Do 2.0 chrt Qg/Qo 0.16 Kg 0.20 d/Do 1.5 chrt Qg/Qo 0.16 Kg 0.22 d/Do 1.35 Interp value Kg 0.23 Ku=Kw= 1.06 Combined pipes in Line case Join Pipes:	0.069	1.06	0.073	13 and Vel1	31 1.052	1.06 Vel2	0.073 0.502	0.28 Eq Dia	0.125 617 Angle	162 Flow	0.283			5.230 5.140	5.445 5.320	5.518		5.518	5.870	41
5 100	14	14 to 51	14			15.00 15.00	138 236		0.79 1.00	0.191 0.191	0.151 0.191	0.151 0.191	58 125	58 FLOW	0.20 WIDTH/DEPTH	65 2.592Wd	7 m	58	0	15	15.00 15.00	138 236	0.151 0.191	125		(Pipe	58 flow=	6.326 Grate	0.63 flow)	375(2	0.53 (1.26)	0.11		Qg 0.058 Qa 0.058 Do 375 CHRT 32: Vo2/2gDo 0.04 H/Do 0.46 Kg side flow 8.02 end flow 5.81	0.014	8.02	0.115			8.02	0.115	0.11	0.007			5.155 5.115	5.327 5.320	5.442		5.442	5.780	14
5 100	51	51 to 61	11;21;12;31;1 3;41;14;51			15.00 15.00	138 236		0.79 1.00	0.191 0.191	0.151 0.191	0.151 0.191	58 125	58 FLOW	0.20 WIDTH/DEPTH	65 2.592Wd	7 m	58	0	61	17.23 17.23	130 222	1.226 1.550	956	1284	(Pipe	513 flow=	443 Sum	45.000 upstr	0.20 atten	750(2 flows)	0.97 (1.14)	0.75		Qg 0.055 Qa 0.443 Do 750 Routine 2.2 CHART 48 Du/Do 0.80 Qu/Qo 0.75 K 0.24 d/Do 2.0 chrt Qg/Qo 0.12 Kg 0.11 d/Do 1.5 chrt Qg/Qo 0.12 Kg 0.11 d/Do 1.20 Interp value Kg 0.11 Ku=Kw= 0.35 Combined pipes in Line case Join Pipes:	0.048	0.35	0.017	14 and Vel1	41 1.179	0.35 Vel2	0.017 0.495	0.15 Eq Dia	0.065 675 Angle	147 Flow	0.388			5.152 5.062	5.303 5.238	5.320		5.320	5.780	51
5 100	15	15 to 61	15			15.00 15.00	138 236		0.79 1.00	0.191 0.191	0.151 0.191	0.151 0.191	58 125	58 FLOW	0.20 WIDTH/DEPTH	65 2.592Wd	7 m	58	0	16	15.00 15.00	138 236	0.151 0.191	125		(Pipe	58 flow=	6.326 Grate	0.63 flow)	375(2	0.53 (1.26)	0.11		Qg 0.058 Qa 0.058 Do 375 CHRT 32: Vo2/2gDo 0.04 H/Do 0.48 Kg side flow 7.94 end flow 5.75	0.014	7.94	0.114			7.94	0.114	0.11	0.007			5.065 5.025	5.245 5.238	5.359		5.359	5.690	15
5 100	61	61 to 71	11;21;12;31;1 3;41;14;51;15 ;61			15.00 15.00	138 236		0.79 1.00	0.191 0.191	0.151 0.191	0.151 0.191	58 125	58 FLOW	0.20 WIDTH/DEPTH	65 2.592Wd	7 m	58	0	71	17.98 17.98	128 218	1.528 1.932	1170	1284	(Pipe	626 flow=	544 Sum	45.000 upstr	0.20 atten	750(2 flows)	1.19 (1.14)	0.63		Qg 0.054 Qa 0.544 Do 750 Routine 2.2 CHART 48 Du/Do 1.00 Qu/Qo 0.80 K 0.77 d/Do 2.0 chrt Qg/Qo 0.10 Kg 0.10 d/Do 1.5 chrt Qg/Qo 0.10 Kg 0.09 d/Do 1.15 Interp value Kg 0.09 Ku=Kw= 0.86 Combined pipes in Line case Join Pipes:	0.072	0.86	0.062	15 and Vel1	51 0.987	0.86 Vel2	0.062 0.487	0.22 Eq Dia	0.099 818 Angle	170 Flow	0.490			5.062 4.972	5.176 5.077	5.238		5.238	5.690	61
5 100	16	16 to 71	16			15.00 15.00	138 236		0.79 1.00	0.191 0.191	0.151 0.191	0.151 0.191	58 125	58 FLOW	0.20 WIDTH/DEPTH	65 2.592Wd	7 m	58	0	17	15.00 15.00	138 236	0.151 0.191	125		(Pipe	58 flow=	6.326 Grate	0.63 flow)	375(2	0.53 (1.26)	0.11		Qg 0.058 Qa 0.058 Do 375 CHRT 32: Vo2/2gDo 0.04 H/Do 0.29 Kg side flow 8.63 end flow 6.23	0.014	8.63	0.123			8.63	0.123	0.11	0.007			4.975 4.935	5.084 5.077	5.207		5.207	5.600	16
5 100	71	71 to 81	11;21;12;31;1 3;41;14;51;15 ;61;16;71			15.00 15.00	138 236		0.79 1.00	0.191 0.191	0.151 0.191	0.151 0.191	58 125	58 FLOW	0.20 WIDTH/DEPTH	65 2.592Wd	7 m	58	0	81	18.61 18.61	126 215	1.830 2.314	1382	1284	(Pipe	741 flow=	641 Sum	45.000 upstr	0.20 atten	825(2 flows)	1.16 (1.21)	0.65		Qg 0.053 Qa 0.641 Do 825 Routine 2.2 CHART 48 Du/Do 0.91 Qu/Qo 0.83 K 0.38 d/Do 2.0 chrt Qg/Qo 0.08 Kg 0.07 d/Do 1.5 chrt Qg/Qo 0.08 Kg 0.06 d/Do 1.09 Interp value Kg 0.06 Ku=Kw= 0.44 Combined pipes in Line case Join Pipes:	0.069	0.44	0.030	16 and Vel1	61 1.211	0.44 Vel2	0.030 0.479	0.18 Eq Dia	0.083 808 Angle	171 Flow	0.588			4.968 4.878	5.047 4.964	5.077		5.077	5.600	71
5 100	17	17 to 81	17			15.00 15.00	138 236		0.79 1.00	0.191 0.191	0.151 0.191	0.151 0.191	58 125	58 FLOW	0.20 WIDTH/DEPTH	65 2.592Wd	7 m	58	0	18	15.00 15.00	138 236	0.151 0.191	125		(Pipe	58 flow=	6.326 Grate	0.63 flow)	375(2	0.53 (1.26)	0.11		Qg 0.058 Qa 0.058 Do 375 CHRT 32: Vo2/2gDo 0.04 H/Do 0.23 Kg side flow 8.86 end flow 6.38	0.014	8.86	0.127			8.86	0.127	0.11	0.007			4.885 4.845	4.971 4.964	5.098		5.098	5.510	17
5 100	81	81 to 91	11 to 71;17;8 1			15.00 15.00	138 236		0.79 1.00	0.191 0.191	0.151 0.191	0.151 0.191	58 125	58 FLOW	0.20 WIDTH/DEPTH	65 2.592Wd	7 m	58	0	91	19.26 19.26	124 211	2.132 2.696	1580	1284	(Pipe	845 flow=	735 Sum	36.000 upstr	0.19 atten	900(2 flows)	1.12 (1.27)	0.54		Qg 0.052 Qa 0.735 Do 900 Routine 2.2 CHART 48 Du/Do 0.92 Qu/Qo 0.86 K 0.33 d/Do 2.0 chrt Qg/Qo 0.07 Kg 0.06 d/Do 1.5 chrt Qg/Qo 0.07 Kg 0.06 d/Do 1.06 Interp value Kg 0.05 Ku=Kw= 0.38 Combined pipes in Line case Join Pipes:	0.064	0.38	0.025	17 and Vel1	71 1.180	0.38 Vel2	0.025 0.472	0.15 Eq Dia	0.054 878 Angle	173 Flow	0.683			4.885 4.815	4.939 4.885	4.964		4.964	5.510	81
5 100	18	18 to 91	18			15.00 15.00	138 236		0.79 1.00	0.153 0.153	0.121 0.153	0.121 0.153	46 100	46 FLOW	0.20 WIDTH/DEPTH	65 2.341Wd	7 m	46	0	19	15.00 15.00	138 236	0.121 0.153	100		(Pipe	46 flow=	6.326 Grate	0.63 flow)	375(2	0.42 (1.26)	0.11		Qg 0.046 Qa 0.046 Do 375 CHRT 32: Vo2/2gDo 0.02 H/Do 0.20 Kg side flow 9.38 end flow 6.64	0.009	9.38	0.085			9.38	0.085	0.07	0.004			4.815 4.775	4.889 4.885	4.974		4.974	5.440	18
5 100	91	91 to 101	11 to 71;17;8 1;18;91			15.00 15.00	138 236		0.79 1.00	0.153 0.153	0.121 0.153	0.121 0.153	46 100	46 FLOW	0.20 WIDTH/DEPTH	65 2.341Wd	7 m	46	0	101	19.80 19.80	122 209	2.374 3.002	1743	1284	(Pipe	938 flow=	804 Sum	45.000 upstr	0.20 atten	900(2 flows)	1.22 (1.29)	0.61		Qg 0.041 Qa 0.804 Do 900 Routine 2.2 CHART 48 Du/Do 1.00 Qu/Qo 0.90 K 0.50 d/Do 2.0 chrt Qg/Qo 0.05 Kg 0.05 d/Do 1.5 chrt Qg/Qo 0.05 Kg 0.05 d/Do 1.03 Interp value Kg 0.04 Ku=Kw= 0.55 Combined pipes in Line case Join Pipes:	0.076	0.55	0.042	18 and Vel1	81 1.137	0.55 Vel2	0.042 0.368	0.18 Eq Dia	0.081 942 Angle	175 Flow	0.764			4.815 4.725	4.843 4.762	4.885		4.885	5.440	91
5 100	19	19 to 101	19			15.00 15.00	138 236		0.79 1.00	0.191 0.191	0.151 0.191	0.151 0.191	58 125	58 FLOW	0.20 WIDTH/DEPTH	65 2.592Wd	7 m	58	0	110	15.00 15.00	138 236	0.151 0.191	125		(Pipe	58 flow=	6.326 Grate	0.63 flow)	375(2	0.53 (1.26)	0.11		Qg 0.058 Qa 0.058 Do 375 CHRT 32: Vo2/2gDo 0.04 H/Do 0.12 Kg side flow 9.27 end flow 6.65	0.014	9.27	0.133			9.27	0.133	0.11	0.007			4.725 4.685	4.769 4.762	4.902		4.902	5.350	19
5 100	101	101 to 111	11 to 71;17;8 1;18;91;19;10 1			15.00 15.00	138 236		0.79 1.00	0.191 0.191	0.151 0.191	0.151 0.191	58 125	58 FLOW	0.20 WIDTH/DEPTH	65 2.592Wd	7 m	58	0	111	20.41 20.41	120 206	2.676 3.384	1936	1284	(Pipe	1044 flow=	892 Sum	45.000 upstr	0.20 atten	1050(2 flows)	1.00 (1.42)	0.75		Qg 0.050 Qa 0.892 Do 1050 Routine 2.2 CHART 48 Du/Do 0.86 Qu/Qo 0.89 K -0.06 d/Do 2.0 chrt Qg/Qo 0.06 Kg 0.04 d/Do 1.5 chrt Qg/Qo 0.06 Kg 0.04 d/Do 1.02 Interp value Kg 0.04 Ku=Kw= -0.02 Combined pipes in Line case Join Pipes:	0.051	0.20	0.011	19 and Vel1	91 1.244	0.20 Vel2	0.011 0.457	0.10 Eq Dia	0.044 946 Angle	174 Flow	0.842			4.726 4.636	4.751 4.707	4.762		4.762	5.350	101
5 100	110	110 to 111	110			15.00 15.00	138 236		0.79 1.00	0.191 0.191	0.151 0.191	0.151 0.191	58 125	58 FLOW	0.20 WIDTH/DEPTH	65 2.592Wd	7 m	58	0	112	15.00 15.00	138 236	0.151 0.191	125		(Pipe	58 flow=	6.326 Grate	0.63 flow)	375(2	0.53 (1.26)	0.11		Qg 0.058 Qa 0.058 Do 375 CHRT 32: Vo2/2gDo 0.04 H/Do 0.21 Kg side flow 8.93 end flow 6.42	0.014	8.93	0.128			8.93	0.128	0.11	0.007			4.635 4.595	4.714 4.707	4.842		4.842	5.260	110
5 100	111	111 to 121	11 to 71;17;8 1;18;91;19;10 1;110;111			15.00 15.00	138 236		0.79 1.00	0.191 0.191	0.151 0.191	0.151 0.191	58 125	58 FLOW	0.20 WIDTH/DEPTH	65 2.592Wd	7 m	58	0	121	21.16 21.16	118 203	2.978 3.766	2124	1284	(Pipe	1147 flow=	976 Sum	45.000 upstr	0.20 atten	1050(2 flows)	1.09 (1.42)	0.69		Qg 0.050 Qa 0.976 Do 1050 Routine 2.1 CHART 48 Du/Do 1.00 Qu/Qo 0.90 K 0.51 d/Do 2.0 chrt Qg/Qo 0.05 Kg 0.05 d/Do 1.5 chrt Qg/Qo 0.05 Kg 0.05 d/Do 1.04 Interp value Kg 0.04 Ku=Kw= 0.55 Combined pipes in Line case Join Pipes:	0.061	0.55	0.033	101 and Vel1	110 1.013	0.55 Vel2	0.033 0.449	0.12 Eq Dia	0.053 1095 Angle	175 Flow	0.927			4.636 4.546	4.674 4.621	4.707		4.707	5.260	111
5 100	112	112 to 121	112			15.00 15.00	138 236		0.79 1.00	0.191 0.191	0.151 0.191	0.151 0.191	58 125	58 FLOW	0.20 WIDTH/DEPTH	65 2.592Wd	7 m	58	0	121	15.00 15.00	138 236	0.151 0.191	125		(Pipe	58 flow=	6.326 Grate	0.63 flow)	375(2	0.53 (1.26)	0.11		Qg 0.058 Qa 0.058 Do 375 CHRT 32: Vo2/2gDo 0.04 H/Do 0.22 Kg side flow 8.89 end flow 6.40	0.014	8.89	0.127			8.89	0.127	0.11	0.007			4.545 4.505	4.628 4.621	4.755		4.755	5.170	112
5 100	121	121 to 131	11 to 111;112 ;121			15.00 15.00	138 236		0.79 1.00	0.191 0.191	0.151 0.191	0.151 0.191	58 125	58 FLOW	0.20 WIDTH/DEPTH	65 2.592Wd	7 m	58	0		21.85 21.85	117 200	3.280 4.148	2304	1284	(Pipe	1238 flow=	1067 Sum	9.425 upstr	0.21 atten	1200(2 flows)	0.91 (1.60)	0.16		Qg 0.049 Qa 1.067 Do 1200 Flow 112 made eqv grate flow CHART 33 Angle 0 S/Do 2.5	0.042	0.35	0.015	Du/Do S/Do K vals	0.88 1.06 above	0.35 Qg/Qo cor 0.16 for stepped	0.015 0.09 Ku 0.35 pipes as grate flow	0.07 K 0.19 Kw 0.35	0.006			4.549 4.529	4.606 4.600	4.621		4.621	5.170	121

Q2 LD RES (1 IN 500 ROAD GRADE) DRAINAGE CALCS

LOCATION					TIME		SUB-CATCHMENT RUNOFF						INLET DESIGN							DRAIN DESIGN														HEADLOSSES										PART FULL DESIGN LEVELS							
						tc	I	C10	C	A	C×A	+CA	Q					Qg	Qb		tc	I	+CA	Qt	Qm	Qs	Qp	L	S		V	T			V2/2g	Ku	hu	Kl	hl	Kw	hw	Sf	hf		Vp							
DESIGN ARI	STRUCTURE No.	DRAIN SECTION	SUB-CATCHMENTS CONTRIBUTING	LAND USE	SLOPE OF CATCHMENT	SUB-CATCHMENT TIME OF CONC.	RAINFALL INTENSITY	10yr RUNOFF CO-EFFICIENT	CO-EFFICIENT OF RUNOFF	SUB-CATCHMENT AREA	EQUIVALENT AREA	SUM OF (C × A)	SUB-CATCHMENT DISCHARGE	FLOW IN K&C (INC. BYPASS)	ROAD GRADE AT INLET	MINOR FLOW ROAD CAPACITY	INLET TYPE	FLOW INTO INLET	BYPASS FLOW	BYPASS STRUCTURE No.	CRITICAL TIME OF CONC.	RAINFALL INTENSITY	TOTAL (C × A)	MAJOR TOTAL FLOW	MAJOR SURFACE FLOW CAPACITY	MAJOR SURFACE FLOW	PIPE FLOW	REACH LENGTH	PIPE GRADE	PIPE / BOX DIMENSIONS (CLASS)	FLOW VELOCITY FULL (PIPE GRADE VELOCITY)	TIME OF FLOW IN REACH	STRUCTURE CHART No.	STRUCTURE RATIOS FOR 'K' VALUE CALCULATIONS	VELOCITY HEAD	U/S HEADLOSS COEFFICIENT	U/S PIPE STRUCT. HEADLOSS	LAT. HEADLOSS CO-EFFICIENT	LAT. PIPE STRUCT. HEADLOSS	W.S.E CO-EFFICIENT	CHANGE IN W.S.E	PIPE FRICTION SLOPE	PIPE FRICTION HEADLOSS (L × Sf)	DEPTH	VELOCITY	OBVERT LEVELS	DRAIN SECTION H.G.L	UPSTREAM H.G.L	LAT. H.G.L	W.S.E.	SURFACE OR K&C INVERT LEVEL	STRUCTURE No.
yrs					%	min	mm/h			ha	ha	ha	l/s	l/s	%	l/s		l/s	l/s		min	mm/h	ha	l/s	l/s	l/s	l/s	m	%	mm	m/s	(min)		m		m		m		m		%	m	m	m/s	m	m	m	m	m	m	
2 100	11	11 to 21	11			15.00 15.00	108 236		0.71 1.00	0.240 0.240	0.170 0.240	0.170 0.240	51 157	51 FLOW	0.20 WIDTH/DEPTH	65 2.451Wd	7 m	51	0	12	15.00 15.00	108 236	0.170 0.240	157		(Pipe	51 flow=	6.326 Grate	0.63 flow)	375(2	0.46 (1.26)	0.11		Qg 0.051 Qo 0.051 Do 375 CHRT 32: Vo2/2gDo 0.03 H/Do 0.96 Kg side flow 6.25 end flow 4.60	0.011	6.25	0.068			6.25	0.068	0.08	0.005			5.415 5.375	5.775 5.770	5.843		5.843	6.040	11
2 100	21	21 to 31	11;21			15.00 15.00	108 236		0.71 1.00	0.240 0.240	0.170 0.240	0.170 0.240	51 157	51 FLOW	0.20 WIDTH/DEPTH	65 2.451Wd	7 m	51	0	31	15.11 15.11	108 235	0.340 0.480	313	1284 (Pipe	211 flow=	102 Sum	54.000 upstr	0.20 atten	450(2 flows)	0.64 (0.81)	0.90		Qg 0.051 Qo 0.102 Do 450 Angle 90 Chart 47 S/Do 2.5 chartdeg Du/Do 0.83 K0 2.07 K0.5 2.30 Qu/Qo 0.50 Cg 1.00 K 2.30 S/Do 2.0 K0 2.48 K0.5 2.40 K 2.40 S/Do 1.5 K0 2.70 K0.5 2.70 K 2.70	0.021	2.09	0.044		Interp	2.47 val for S/Do	0.052 1.88 Kw	0.13 2.47	0.069			5.380 5.270	5.726 5.657	5.770		5.778	6.040	21
2 100	12	12 to 31	12			15.00 15.00	108 236		0.71 1.00	0.230 0.230	0.163 0.230	0.163 0.230	49 151	49 FLOW	0.20 WIDTH/DEPTH	65 2.408Wd	7 m	49	0	13	15.00 15.00	108 236	0.163 0.230	151		(Pipe	49 flow=	6.326 Grate	0.63 flow)	375(2	0.44 (1.26)	0.11		Qg 0.049 Qo 0.049 Do 375 CHRT 32: Vo2/2gDo 0.03 H/Do 0.95 Kg side flow 6.34 end flow 4.65	0.010	6.34	0.063			6.34	0.063	0.08	0.005			5.305 5.265	5.662 5.657	5.725		5.725	5.930	12
2 100	31	31 to 41	11;21;12;31			15.00 15.00	108 236		0.71 1.00	0.230 0.230	0.163 0.230	0.163 0.230	49 151	49 FLOW	0.20 WIDTH/DEPTH	65 2.408Wd	7 m	49	0	41	16.01 16.01	105 229	0.666 0.940	598	1284 (Pipe	404 flow=	194 Sum	54.000 upstr	0.20 atten	525(2 flows)	0.87 (0.91)	0.90		Qg 0.048 Qo 0.194 Do 525 Routine 2.2 CHART 48 Du/Do 0.86 Qu/Qo 0.51 K 1.28 d/Do 2.0 chrt Qg/Qo 0.25 Kg 0.34 d/Do 1.5 chrt Qg/Qo 0.25 Kg 0.40 d/Do 1.58 Interp value Kg 0.39 Ku=Kw= 1.67 Combined pipes in line case Join Pipes:	0.039	1.67	0.064		12 and	1.67 21 Vel1 0.624	0.064 Vel2 0.431	0.19 Eq Dia 577 Angle 150 Flow	0.101 0.147			5.284 5.174	5.593 5.492	5.657		5.657	5.930	31
2 100	13	13 to 41	13			15.00 15.00	108 236		0.71 1.00	0.230 0.230	0.163 0.230	0.163 0.230	49 151	49 FLOW	0.20 WIDTH/DEPTH	65 2.408Wd	7 m	49	0	14	15.00 15.00	108 236	0.163 0.230	151		(Pipe	49 flow=	6.326 Grate	0.63 flow)	375(2	0.44 (1.26)	0.11		Qg 0.049 Qo 0.049 Do 375 CHRT 32: Vo2/2gDo 0.03 H/Do 0.81 Kg side flow 6.93 end flow 5.03	0.010	6.93	0.068			6.93	0.068	0.08	0.005			5.195 5.155	5.497 5.492	5.565		5.565	5.820	13
2 100	41	41 to 51	11;21;12;31;1 3;41			15.00 15.00	108 236		0.71 1.00	0.230 0.230	0.163 0.230	0.163 0.230	49 151	49 FLOW	0.20 WIDTH/DEPTH	65 2.408Wd	7 m	49	0	51	16.91 16.91	102 224	0.992 1.400	871	1284 (Pipe	590 flow=	281 Sum	54.000 upstr	0.20 atten	600(2 flows)	0.96 (0.99)	0.90		Qg 0.046 Qo 0.281 Do 600 Routine 2.2 CHART 48 Du/Do 0.88 Qu/Qo 0.67 K 0.84 d/Do 2.0 chrt Qg/Qo 0.16 Kg 0.20 d/Do 1.5 chrt Qg/Qo 0.16 Kg 0.22 d/Do 1.43 Interp value Kg 0.23 Ku=Kw= 1.07 Combined pipes in line case Join Pipes:	0.047	1.07	0.050		13 and	1.07 31 Vel1 0.873	0.050 Vel2 0.419	0.19 Eq Dia 618 Angle 162 Flow	0.104 0.235			5.188 5.070	5.442 5.338	5.492		5.492	5.820	41
2 100	14	14 to 51	14			15.00 15.00	108 236		0.71 1.00	0.230 0.230	0.163 0.230	0.163 0.230	49 151	49 FLOW	0.20 WIDTH/DEPTH	65 2.408Wd	7 m	49	0	15	15.00 15.00	108 236	0.163 0.230	151		(Pipe	49 flow=	6.326 Grate	0.63 flow)	375(2	0.44 (1.26)	0.11		Qg 0.049 Qo 0.049 Do 375 CHRT 32: Vo2/2gDo 0.03 H/Do 0.66 Kg side flow 7.52 end flow 5.42	0.010	7.52	0.074			7.52	0.074	0.08	0.005			5.095 5.055	5.343 5.338	5.417		5.417	5.720	14
2 100	51	51 to 61	11;21;12;31;1 3;41;14;51			15.00 15.00	108 236		0.71 1.00	0.230 0.230	0.163 0.230	0.163 0.230	49 151	49 FLOW	0.20 WIDTH/DEPTH	65 2.408Wd	7 m	49	0	61	17.81 17.81	100 219	1.318 1.860	1132	1284 (Pipe	765 flow=	367 Sum	54.000 upstr	0.20 atten	600(2 flows)	1.25 (0.99)	0.72		Qg 0.045 Qo 0.367 Do 600 Routine 2.2 CHART 48 Du/Do 1.00 Qu/Qo 0.75 K 0.91 d/Do 2.0 chrt Qg/Qo 0.12 Kg 0.15 d/Do 1.5 chrt Qg/Qo 0.12 Kg 0.16 d/Do 1.30 Interp value Kg 0.16 Ku=Kw= 1.07 Combined pipes in line case Join Pipes:	0.080	1.07	0.085		14 and	1.07 41 Vel1 0.976	0.085 Vel2 0.411	0.33 Eq Dia 675 Angle 167 Flow	0.177 0.321			5.070 4.960	5.253 5.076	5.338		5.338	5.720	51
2 100	15	15 to 61	15			15.00 15.00	108 236		0.71 1.00	0.230 0.230	0.163 0.230	0.163 0.230	49 151	49 FLOW	0.20 WIDTH/DEPTH	65 2.408Wd	7 m	49	0	16	15.00 15.00	108 236	0.163 0.230	151		(Pipe	49 flow=	6.326 Grate	0.63 flow)	375(2	0.44 (1.26)	0.11		Qg 0.049 Qo 0.049 Do 375 CHRT 32: Vo2/2gDo 0.03 H/Do 0.26 Kg side flow 9.09 end flow 6.47	0.010	9.09	0.090			9.09	0.090	0.08	0.005			4.985 4.945	5.081 5.076	5.171		5.171	5.610	15
2 100	61	61 to 71	11;21;12;31;1 3;41;14;51;15 ;61			15.00 15.00	108 236		0.71 1.00	0.230 0.230	0.163 0.230	0.163 0.230	49 151	49 FLOW	0.20 WIDTH/DEPTH	65 2.408Wd	7 m	49	0	71	18.53 18.53	98 215	1.644 2.320	1386	1284 (Pipe	937 flow=	448 Sum	54.000 upstr	0.20 atten	750(2 flows)	0.98 (1.15)	0.90		Qg 0.044 Qo 0.448 Do 750 Routine 2.2 CHART 48 Du/Do 0.80 Qu/Qo 0.80 K 0.02 d/Do 2.0 chrt Qg/Qo 0.10 Kg 0.07 d/Do 1.5 chrt Qg/Qo 0.10 Kg 0.06 d/Do 1.13 Interp value Kg 0.05 Ku=Kw= 0.07 Combined pipes in line case Join Pipes:	0.049	0.07	0.003		15 and	0.07 51 Vel1 1.271	0.003 Vel2 0.403	0.15 Eq Dia 661 Angle 170 Flow	0.081 0.404			4.972 4.862	5.073 4.992	5.076		5.076	5.610	61
2 100	16	16 to 71	16			15.00 15.00	108 236		0.71 1.00	0.230 0.230	0.163 0.230	0.163 0.230	49 151	49 FLOW	0.20 WIDTH/DEPTH	65 2.408Wd	7 m	49	0	17	15.00 15.00	108 236	0.163 0.230	151		(Pipe	49 flow=	6.326 Grate	0.63 flow)	375(2	0.44 (1.26)	0.11		Qg 0.049 Qo 0.049 Do 375 CHRT 32: Vo2/2gDo 0.03 H/Do 0.33 Kg side flow 8.83 end flow 6.30	0.010	8.83	0.087			8.83	0.087	0.08	0.005			4.875 4.835	4.997 4.992	5.084		5.084	5.500	16
2 100	71	71 to 81	11;21;12;31;1 3;41;14;51;15 ;61;16;71			15.00 15.00	108 236		0.71 1.00	0.230 0.230	0.163 0.230	0.163 0.230	49 151	49 FLOW	0.20 WIDTH/DEPTH	65 2.408Wd	7 m	49	0	81	19.43 19.43	96 211	1.970 2.780	1629	1284 (Pipe	1103 flow=	526 Sum	54.000 upstr	0.20 atten	750(2 flows)	1.15 (1.15)	0.78		Qg 0.044 Qo 0.526 Do 750 Routine 2.2 CHART 48 Du/Do 1.00 Qu/Qo 0.83 K 0.68 d/Do 2.0 chrt Qg/Qo 0.08 Kg 0.08 d/Do 1.5 chrt Qg/Qo 0.08 Kg 0.08 d/Do 1.10 Interp value Kg 0.07 Ku=Kw= 0.76 Combined pipes in line case Join Pipes:	0.067	0.76	0.051		16 and	0.76 61 Vel1 0.994	0.051 Vel2 0.394	0.21 Eq Dia 808 Angle 171 Flow	0.111 0.483			4.862 4.752	4.941 4.830	4.992		4.992	5.500	71
2 100	17	17 to 81	17			15.00 15.00	108 236		0.71 1.00	0.230 0.230	0.163 0.230	0.163 0.230	49 151	49 FLOW	0.20 WIDTH/DEPTH	65 2.408Wd	7 m	49	0	18	15.00 15.00	108 236	0.163 0.230	151		(Pipe	49 flow=	6.326 Grate	0.63 flow)	375(2	0.44 (1.26)	0.11		Qg 0.049 Qo 0.049 Do 375 CHRT 32: Vo2/2gDo 0.03 H/Do 0.19 Kg side flow 9.36 end flow 6.64	0.010	9.36	0.092			9.36	0.092	0.08	0.005			4.765 4.725	4.835 4.830	4.927		4.927	5.390	17
2 100	81	81 to 91	11 to 71;17;8 1			15.00 15.00	108 236		0.71 1.00	0.230 0.230	0.163 0.230	0.163 0.230	49 151	49 FLOW	0.20 WIDTH/DEPTH	65 2.408Wd	7 m	49	0	91	20.21 20.21	94 207	2.296 3.240	1863	1284 (Pipe	1262 flow=	601 Sum	54.000 upstr	0.20 atten	825(2 flows)	1.09 (1.22)	0.83		Qg 0.043 Qo 0.601 Do 825 Routine 2.2 CHART 48 Du/Do 0.91 Qu/Qo 0.86 K 0.30 d/Do 2.0 chrt Qg/Qo 0.07 Kg 0.06 d/Do 1.5 chrt Qg/Qo 0.07 Kg 0.06 d/Do 1.06 Interp value Kg 0.05 Ku=Kw= 0.35 Combined pipes in line case Join Pipes:	0.061	0.35	0.021		17 and	0.35 71 Vel1 1.166	0.021 Vel2 0.386	0.16 Eq Dia 881 Angle 173 Flow	0.087 0.558			4.758 4.648	4.809 4.722	4.830		4.830	5.390	81
2 100	18	18 to 91	18			15.00 15.00	108 236		0.71 1.00	0.230 0.230	0.163 0.230	0.163 0.230	49 151	49 FLOW	0.20 WIDTH/DEPTH	65 2.408Wd	7 m	49	0	19	15.00 15.00	108 236	0.163 0.230	151		(Pipe	49 flow=	6.326 Grate	0.63 flow)	375(2	0.44 (1.26)	0.11		Qg 0.049 Qo 0.049 Do 375 CHRT 32: Vo2/2gDo 0.03 H/Do 0.19 Kg side flow 9.34 end flow 6.63	0.010	9.34	0.092			9.34	0.092	0.08	0.005			4.655 4.615	4.727 4.722	4.819		4.819	5.280	18
2 100	91	91 to 101	11 to 71;17;8 1;18;91			15.00 15.00	108 236		0.71 1.00	0.230 0.230	0.163 0.230	0.163 0.230	49 151	49 FLOW	0.20 WIDTH/DEPTH	65 2.408Wd	7 m	49	0	101	21.04 21.04	93 203	2.622 3.700	2086	1284 (Pipe	1388 flow=	699 Sum	54.000 upstream	0.20 flows)	900(2	1.06 (1.30)	0.85		Qg 0.049 Qo 0.699 Do 900 Routine 2.2 CHART 48 Du/Do 0.92 Qu/Qo 0.86 K 0.32 d/Do 2.0 chrt Qg/Qo 0.07 Kg 0.06 d/Do 1.5 chrt Qg/Qo 0.07 Kg 0.06 d/Do 1.05 Interp value Kg 0.05 Ku=Kw= 0.38 Combined pipes in line case Join Pipes:	0.057	0.38	0.021		18 and	0.38 81 Vel1 1.123	0.021 Vel2 0.444	0.14 Eq Dia 878 Angle 173 Flow	0.074 0.650			4.655 4.545	4.701 4.627	4.722		4.722	5.280	91
2 100	19	19 to 101	19			15.00 15.00	108 236		0.71 1.00	0.230 0.230	0.163 0.230	0.163 0.230	49 151	49 FLOW	0.20 WIDTH/DEPTH	65 2.408Wd	7 m	49	0	101	15.00 15.00	108 236	0.163 0.230	151		(Pipe	49 flow=	6.326 Grate	0.63 flow)	375(2	0.44 (1.26)	0.11		Qg 0.049 Qo 0.049 Do 375 CHRT 32: Vo2/2gDo 0.03 H/Do 0.23 Kg side flow 9.18 end flow 6.53	0.010	9.18	0.091			9.18	0.091	0.08	0.005			4.545 4.505	4.632 4.627	4.723		4.723	5.170	19
2 100	101	101 to 111	11 to 71;17;8 1;18;91;19;10 1			15.00 15.00	108 236		0.71 1.00	0.230 0.230	0.163 0.230	0.163 0.230	49 151	49 FLOW	0.20 WIDTH/DEPTH	65 2.408Wd	7 m	49	0		21.89 21.89	91 199	2.948 4.160	2300	1284 (Pipe	1503 flow=	797 Sum	9.425 upstream	0.21 flows)	1050(2	0.89 (1.47)	0.16		Qg 0.049 Qo 0.797 Do 1050 Routine 2.2 CHART 48 Du/Do 0.86 Qu/Qo 0.88 K -0.02 d/Do 2.0 chrt Qg/Qo 0.06 Kg 0.05 d/Do 1.5 chrt Qg/Qo 0.06 Kg 0.04 d/Do 1.08 Interp value Kg 0.04 Ku=Kw= 0.02 Combined pipes in line case Join Pipes:	0.040	0.02	0.001		19 and	0.02 91 Vel1 1.098	0.001 Vel2 0.444	0.08 Eq Dia 949 Angle 174 Flow	0.007 0.748	0.600	1.54	4.626 4.606	4.626 4.600	4.627		4.627	5.170	101

Q5 LD RES (1 IN 50 ROAD GRADE) DRAINAGE CALCS

LOCATION					TIME			SUB-CATCHMENT RUNOFF						INLET DESIGN						
						tc	I	C10	C	A	C×A	+CA	Q					Qg	Qb	
DESIGN ARI	STRUCTURE No.	DRAIN SECTION	SUB-CATCHMENTS CONTRIBUTING	LAND USE	SLOPE OF CATCHMENT	SUB-CATCHMENT TIME OF CONC.	RAINFALL INTENSITY	10yr RUNOFF CO-EFFICIENT	CO-EFFICIENT OF RUNOFF	SUB-CATCHMENT AREA	EQUIVALENT AREA	SUM OF (C × A)	SUB-CATCHMENT DISCHARGE	FLOW IN K&C (INC. BYPASS)	ROAD GRADE AT INLET	MINOR FLOW ROAD CAPACITY	INLET TYPE	FLOW INTO INLET	BYPASS FLOW	BYPASS STRUCTURE No.
yrs					%	min	mm/h			ha	ha	ha	l/s	l/s	%	l/s		l/s	l/s	
5 100	11	11 to 21	11			13.00 13.00	147 250		0.79 1.00	0.546 0.546	0.431 0.546	0.431 0.546	176 379	176	2.00	206	7 FLOW WIDTH/DEPTH 2.546Wd DOWNSTREAM 1.366m	129	47	12
5 100	21	21 to 31	11;21			13.00 13.00	147 250		0.79 1.00	0.546 0.546	0.431 0.546	0.431 0.546	176 379	176	2.00	206	7 FLOW WIDTH/DEPTH 2.546Wd DOWNSTREAM 1.366m	129	47	31
5 100	12	12 to 31	12			13.00 13.00	147 250		0.79 1.00	0.383 0.383	0.303 0.383	0.303 0.383	124 266	171	2.00	206	7 FLOW WIDTH/DEPTH 2.514Wd DOWNSTREAM 1.320m	127	44	13
5 100	31	31 to 41	11;21;12;31			13.00 13.00	147 250		0.79 1.00	0.383 0.383	0.303 0.383	0.303 0.383	124 266	171	2.00	206	7 FLOW WIDTH/DEPTH 2.514Wd DOWNSTREAM 1.320m	127	44	41
5 100	13	13 to 41	13			13.00 13.00	147 250		0.79 1.00	0.383 0.383	0.303 0.383	0.303 0.383	124 266	168	2.00	206	7 FLOW WIDTH/DEPTH 2.494Wd DOWNSTREAM 1.304m	125	43	14
5 100	41	41 to 51	11;21;12;31;1 3;41			13.00 13.00	147 250		0.79 1.00	0.383 0.383	0.303 0.383	0.303 0.383	124 266	168	2.00	206	7 FLOW WIDTH/DEPTH 2.494Wd DOWNSTREAM 1.304m	125	43	51
5 100	14	14 to 51	14			13.00 13.00	147 250		0.79 1.00	0.383 0.383	0.303 0.383	0.303 0.383	124 266	167	2.00	206	7 FLOW WIDTH/DEPTH 2.488Wd DOWNSTREAM 1.288m	125	42	15
5 100	51	51 to 61	11;21;12;31;1 3;41;14;51			13.00 13.00	147 250		0.79 1.00	0.383 0.383	0.303 0.383	0.303 0.383	124 266	167	2.00	206	7 FLOW WIDTH/DEPTH 2.488Wd DOWNSTREAM 1.288m	125	42	61
5 100	15	15 to 61	15			13.00 13.00	147 250		0.79 1.00	0.383 0.383	0.303 0.383	0.303 0.383	124 266	166	2.00	206	7 FLOW WIDTH/DEPTH 2.481Wd DOWNSTREAM 1.288m	124	42	61
5 100	61	61 to 71	11;21;12;31;1 3;41;14;51;15 ;61			13.00 13.00	147 250		0.79 1.00	0.383 0.383	0.303 0.383	0.303 0.383	124 266	206 -CrnFl 2	2.00	206	7 FLOW WIDTH/DEPTH 2.728Wd DOWNSTREAM 1.606m	141	65 2	Crn ×

DRAIN DESIGN														HEADLOSSES										PART FULL		DESIGN LEVELS						
	tc	I	+CA	Qt	Qm	Qs	Qp	L	S		V	T			V2/2g	Ku	hu	Kl	hl	Kw	hw	Sf	hf		Vp							
DESIGN ARI	CRITICAL TIME OF CONC.	RAINFALL INTENSITY	TOTAL (C × A)	MAJOR TOTAL FLOW	MAJOR SURFACE FLOW CAPACITY	MAJOR SURFACE FLOW	PIPE FLOW	REACH LENGTH	PIPE GRADE	PIPE / BOX DIMENSIONS (CLASS)	FLOW VELOCITY FULL (PIPE GRADE VELOCITY)	TIME OF FLOW IN REACH	STRUCTURE CHART No.	STRUCTURE RATIOS FOR 'K' VALUE CALCULATIONS	VELOCITY HEAD	U/S HEADLOSS COEFFICIENT	U/S PIPE STRUCT. HEADLOSS	LAT. HEADLOSS CO-EFFICIENT	LAT. PIPE STRUCT. HEADLOSS	W.S.E CO-EFFICIENT	CHANGE IN W.S.E	PIPE FRICTION SLOPE	PIPE FRICTION HEADLOSS (L × Sf)	DEPTH	VELOCITY	OBVERT LEVELS	DRAIN SECTION H.G.L	UPSTREAM H.G.L	LAT. H.G.L	W.S.E.	SURFACE OR K&C INVERT LEVEL	STRUCTURE No.
yrs	min	mm/h	ha	l/s	l/s	l/s	l/s	m	%	mm	m/s	min			m		m		m		m	%	m	m	m/s	m	m	m	m	m	m	
5 100	13.00 13.00	147 250	0.431 0.546	379		(Pipe	129 flow=	6.326 Grate	0.63 flow)	375(2	1.17 (1.26)	0.09		Qg 0.129 Qo 0.129 Do 375 CHRT 32: Vo2/2gDo 0.19 H/Do 0.74 Kg side flow 4.68 end flow 3.81	0.070	4.68	0.327			4.68	0.327	0.54	0.034			11.745 11.705	12.021 11.987	12.348		12.348	12.540	11
5 100	13.09 13.09	146 249	0.862 1.092	755	1735 (Pipe	499 flow=	256 Sum	90.000 upstr	1.96 atten	450(2 flows)	1.61 (2.51)	0.93		Qg 0.128 Qo 0.256 Do 450 Angle 90 Chart 47 S/Do 2.5 chartdeg Du/Do 0.83 K0 2.07 K0.5 2.30 Du/Qo 0.50 Cg 1.00 K 2.30 S/Do 2.0 K0 2.48 K0.5 2.40 K 2.40 S/Do 1.5 K0 2.70 K0.5 2.70 K 2.70	0.132	2.17	0.287		Interp val for CHART 46 S/Do 2.0 K0 1.97 K0.5 2.02 K 2.02 S/Do 1.5 K0 2.09 K0.5 2.31 K 2.31 Interp val for	2.55 S/Do	0.337 1.75 Kw	0.81 2.55	0.728	0.263	2.66	11.700 9.940	11.700 10.395	11.987		12.037	12.540	21
5 100	13.00 13.00	147 250	0.303 0.383	266		(Pipe	127 flow=	6.326 Grate	0.63 flow)	375(2	1.15 (1.26)	0.09		Qg 0.127 Qo 0.127 Do 375 CHRT 32: Vo2/2gDo 0.18 H/Do 1.34 Kg side flow 3.77 end flow 3.21	0.067	3.77	0.254			3.77	0.254	0.53	0.033			9.925 9.885	10.428 10.395	10.682		10.682	10.740	12
5 100	14.02 14.02	142 242	1.468 1.858	1249	1735 (Pipe	754 flow=	495 Sum	90.000 upstr	2.00 atten	525(2 flows)	2.21 (2.84)	0.68		Qg 0.123 Qo 0.495 Do 525 Routine 2.2 CHART 48 Du/Do 0.86 Qu/Qo 0.50 K 1.30 d/Do 2.0 chrt Qg/Qo 0.25 Kg 0.35 d/Do 1.5 chrt Qg/Qo 0.25 Kg 0.41 d/Do 1.00 Interp value Kg 0.47 Ku=Kw= 1.77 Combined pipes in line case Join Pipes:	0.249	1.77	0.441		12 and 21 Vel1 1.567 Vel2 1.111 Eq Dia 578 Angle 150 Flow 0.372 CHART 33 Angle 0 S/Do 2.5 Du/Do 1.10 Qg/Qo 0.25 K 0.94 S/Do 1.56 cor 0.25 Ku 1.19 Kw 1.19 Interpolated Ku= 1.77 Kw= 1.77	1.77	0.441	1.21	1.089	0.354	3.14	9.954 8.154	9.954 8.496	10.395		10.395	10.740	31
5 100	13.00 13.00	147 250	0.303 0.383	266		(Pipe	125 flow=	6.326 Grate	0.63 flow)	375(2	1.13 (1.26)	0.09		Qg 0.125 Qo 0.125 Do 375 CHRT 32: Vo2/2gDo 0.17 H/Do 0.84 Kg side flow 4.63 end flow 3.76	0.065	4.63	0.302			4.63	0.302	0.51	0.032			8.215 8.175	8.528 8.496	8.830		8.830	8.940	13
5 100	14.70 14.70	139 238	2.074 2.624	1735	1735 (Pipe	1014 flow=	721 Sum	90.000 upstr	2.00 atten	600(2 flows)	2.47 (3.10)	0.61		Qg 0.118 Qo 0.721 Do 600 Routine 2.2 CHART 48 Du/Do 0.88 Qu/Qo 0.67 K 0.83 d/Do 2.0 chrt Qg/Qo 0.16 Kg 0.20 d/Do 1.5 chrt Qg/Qo 0.16 Kg 0.22 d/Do 1.00 Interp value Kg 0.25 Ku=Kw= 1.08 Combined pipes in line case Join Pipes:	0.311	1.08	0.336		13 and 31 Vel1 2.236 Vel2 1.070 Eq Dia 618 Angle 162 Flow 0.602 CHART 33 Angle 0 S/Do 2.5 Du/Do 1.03 Qg/Qo 0.16 K 0.70 S/Do 1.46 cor 0.19 Ku 0.89 Kw 0.89 Interpolated Ku= 1.08 Kw= 1.08	1.08	0.336	1.26	1.136	0.410	3.44	8.160 6.360	8.160 6.441	8.496		8.496	8.940	41
5 100	13.00 13.00	147 250	0.303 0.383	266		(Pipe	125 flow=	6.326 Grate	0.63 flow)	375(2	1.13 (1.26)	0.09		Qg 0.125 Qo 0.125 Do 375 CHRT 32: Vo2/2gDo 0.17 H/Do 0.16 Kg side flow 6.11 end flow 4.89	0.065	6.11	0.398			6.11	0.398	0.51	0.032			6.415 6.375	6.473 6.441	6.871		6.871	7.140	14
5 100	15.31 15.31	137 234	2.680 3.390	2203	1735 (Pipe	1260 flow=	943 Sum	90.000 upstr	1.89 atten	750(2 flows)	2.07 (3.50)	0.72		Qg 0.116 Qo 0.943 Do 750 Routine 2.2 CHART 48 Du/Do 0.80 Qu/Qo 0.75 K 0.24 d/Do 2.0 chrt Qg/Qo 0.12 Kg 0.11 d/Do 1.5 chrt Qg/Qo 0.12 Kg 0.11 d/Do 1.00 Interp value Kg 0.11 Ku=Kw= 0.36 Combined pipes in line case Join Pipes:	0.218	0.36	0.079		14 and 41 Vel1 2.512 Vel2 1.056 Eq Dia 675 Angle 167 Flow 0.827 CHART 33 Angle 0 S/Do 2.5 Du/Do 0.90 Qg/Qo 0.12 K 0.40 S/Do 1.17 cor 0.19 Ku 0.59 Kw 0.59 Interpolated Ku= 0.36 Kw= 0.36	0.36	0.079	0.66	0.594	0.422	3.64	6.362 4.662	6.362 4.967	6.441		6.441	7.140	51
5 100	13.00 13.00	147 250	0.303 0.383	266		(Pipe	124 flow=	6.326 Grate	0.63 flow)	375(2	1.12 (1.26)	0.09		Qg 0.124 Qo 0.124 Do 375 CHRT 32: Vo2/2gDo 0.17 H/Do 1.82 Kg side flow 3.26 end flow 2.88	0.064	3.26	0.208			3.26	0.208	0.50	0.032			4.315 4.275	4.999 4.967	5.207		5.207	5.340	15
5 100	16.03 16.03	134 229	3.286 4.156	2644	1735 (Pipe	1480 flow=	1164 Sum	9.425 upstr	1.59 atten	750(2 flows)	2.55 (3.21)	0.06		Qg 0.129 Qo 1.164 Do 750 Routine 2.2 CHART 48 Du/Do 1.00 Qu/Qo 0.79 K 0.80 d/Do 2.0 chrt Qg/Qo 0.11 Kg 0.12 d/Do 1.5 chrt Qg/Qo 0.11 Kg 0.12 d/Do 1.00 Interp value Kg 0.12 Ku=Kw= 0.92 Combined pipes in line case Join Pipes:	0.331	0.92	0.305		15 and 51 Vel1 2.088 Vel2 1.023 Eq Dia 817 Angle 170 Flow 1.036 CHART 33 Angle 0 S/Do 2.5 Du/Do 1.09 Qg/Qo 0.11 K 0.54 S/Do 1.30 cor 0.15 Ku 0.69 Kw 0.69 Interpolated Ku= 0.92 Kw= 0.92	0.92	0.305	1.01	0.095	0.513	3.56	4.662 4.512	4.662 4.500	4.967		4.967	5.340	61

Q2 LD RES (1 IN 50 ROAD GRADE) DRAINAGE CALCS

LOCATION					TIME		SUB-CATCHMENT RUNOFF						INLET DESIGN							DRAIN DESIGN												HEADLOSSES										PART FULL		DESIGN LEVELS					
						tc	I	C10	C	A	C×A	+CA	Q					Qg	Qb		tc	I	+CA	Qt	Qm	Qs	Qp	L	S		V	T			V2/2g	Ku	hu	Kl	hl	Kw	hw	Sf	hf		Vp						
DESIGN ARI	STRUCTURE No.	DRAIN SECTION	SUB-CATCHMENTS CONTRIBUTING	LAND USE	SLOPE OF CATCHMENT	SUB-CATCHMENT TIME OF CONC.	RAINFALL INTENSITY	10yr RUNOFF CO-EFFICIENT	CO-EFFICIENT OF RUNOFF	SUB-CATCHMENT AREA	EQUIVALENT AREA	SUM OF (C × A)	SUB-CATCHMENT DISCHARGE	FLOW IN K&C (INC. BYPASS)	ROAD GRADE AT INLET	MINOR FLOW ROAD CAPACITY	INLET TYPE	FLOW INTO INLET	BYPASS FLOW	BYPASS STRUCTURE No.	CRITICAL TIME OF CONC.	RAINFALL INTENSITY	TOTAL (C × A)	MAJOR TOTAL FLOW	MAJOR SURFACE FLOW CAPACITY	MAJOR SURFACE FLOW	PIPE FLOW	REACH LENGTH	PIPE GRADE	PIPE / BOX DIMENSIONS (CLASS)	FLOW VELOCITY FULL (PIPE GRADE VELOCITY)	TIME OF FLOW IN REACH	STRUCTURE CHART No.	STRUCTURE RATIOS FOR 'K' VALUE CALCULATIONS	VELOCITY HEAD	U/S HEADLOSS COEFFICIENT	U/S PIPE STRUCT. HEADLOSS	LAT. HEADLOSS CO-EFFICIENT	LAT. PIPE STRUCT. HEADLOSS	W.S.E CO-EFFICIENT	CHANGE IN W.S.E	PIPE FRICTION SLOPE	PIPE FRICTION HEADLOSS (L × Sf)	DEPTH	VELOCITY	OBVERT LEVELS	DRAIN SECTION H.G.L	UPSTREAM H.G.L	LAT. H.G.L	W.S.E.	SURFACE OR K&C INVERT LEVEL	STRUCTURE No.
yrs					%	min	mm/h			ha	ha	ha	l/s	l/s	%	l/s		l/s	l/s		min	mm/h	ha	l/s	l/s	l/s	l/s	m	%	mm	m/s	min			m		m		m		m	%	m	m	m/s	m	m	m	m	m	m	
2 100	11	11 to 21	11			13.00 13.00	115 250		0.71 1.00	0.546 0.546	0.388 0.546	0.388 0.546	124 379	124	2.00 FLOW WIDTH/DEPTH 2.177Wd DOWNSTREAM 0.894m	206	7	102 m	22	12	13.00 13.00	115 250	0.388 0.546	379		(Pipe | 102 flow= | 6.326 Grate | 0.63 flow)	375(2)	0.92 (1.26)	0.11		Qg 0.102 Qo 0.102 Do 375 CHRT 32: Vo2/2gDo 0.12 H/Do 0.84 Kg side flow 5.21 end flow 4.14	0.043	5.21	0.225			5.21	0.225	0.34	0.021			11.815 11.775	12.128 12.107	12.353		12.353	12.540	11
2 100	21	21 to 31	11;21			13.00 13.00	115 250		0.71 1.00	0.546 0.546	0.388 0.546	0.388 0.546	124 379	124	2.00 FLOW WIDTH/DEPTH 2.177Wd DOWNSTREAM 0.894m	206	7	102 m	22	31	13.11 13.11	114 249	0.776 1.092	755	1735 (Pipe	553 flow=	202 Sum	90.000 upstr	2.14 atten	375(2) flows)	1.83 (2.32)	0.82		Qg 0.101 Qo 0.202 Do 375 Angle 90 Chart 47 S/Do 2.5 chartdeg Du/Do 1.00 K0 1.92 K0.5 2.12 Qu/Qo 0.50 Cg 1.00 K 2.12 S/Do 2.5 K0 1.92 K0.5 2.12 K 2.12 S/Do 2.0 K0 2.44 K0.5 2.40 K 2.40	0.171	1.87	0.319	Interp	val for CHART	2.35 S/Do 46 S/Do 2.5 K0 1.82 K0.5 1.71 K 1.71 S/Do 2.0 K0 2.04 K0.5 1.92 K 1.92 Interp val for S/Do	0.401 2.10	1.33 Kw 2.35	1.199			11.775 9.845	11.788 10.589	12.107		12.189	12.540	21
2 100	12	12 to 31	12			13.00 13.00	115 250		0.71 1.00	0.383 0.383	0.272 0.383	0.272 0.383	87 266	109	2.00 FLOW WIDTH/DEPTH 2.053Wd DOWNSTREAM 0.728m	206	7	93 m	16	13	13.00 13.00	115 250	0.272 0.383	266		(Pipe | 93 flow= | 6.326 Grate | 0.63 flow)	375(2)	0.84 (1.26)	0.11		Qg 0.093 Qo 0.093 Do 375 CHRT 32: Vo2/2gDo 0.10 H/Do 1.98 Kg side flow 3.35 end flow 2.92	0.036	3.35	0.120			3.35	0.120	0.28	0.018			9.865 9.825	10.607 10.589	10.727		10.727	10.740	12
2 100	31	31 to 41	11;21;12;31			13.00 13.00	115 250		0.71 1.00	0.383 0.383	0.272 0.383	0.272 0.383	87 266	109	2.00 FLOW WIDTH/DEPTH 2.053Wd DOWNSTREAM 0.728m	206	7	93 m	16	41	13.93 13.93	111 243	1.320 1.858	1254	1735 (Pipe	878 flow=	376 Sum	90.000 upstr	1.76 atten	450(2) flows)	2.37 (2.37)	0.63		Qg 0.090 Qo 0.376 Do 450 Routine 2.2 CHART 48 Du/Do 0.83 Qu/Qo 0.52 K 1.20 d/Do 2.0 chrt Qg/Qo 0.24 Kg 0.32 d/Do 1.5 chrt Qg/Qo 0.24 Kg 0.37 d/Do 1.65 Interp value Kg 0.36 Ku=Kw= 1.56 Combined pipes in line case Join Pipes:	0.286	1.56	0.447		12 and 21 Vel1 1.783 Vel2 0.813 Eq Dia 496 Angle 151 Flow 0.287 CHART 33 Angle 0 S/Do 2.5 Du/Do 1.10 Qg/Qo 0.24 K 0.92 S/Do 2.26 cor 0.04 Ku 0.96 Kw 0.96 Interpolated Ku= 1.56 Kw= 1.56	1.56	0.447	1.75	1.571			9.850 8.270	10.142 8.571	10.589		10.589	10.740	31
2 100	13	13 to 41	13			13.00 13.00	115 250		0.71 1.00	0.383 0.383	0.272 0.383	0.272 0.383	87 266	103	2.00 FLOW WIDTH/DEPTH 2.000Wd DOWNSTREAM 0.628m	206	7	90 m	13	14	13.00 13.00	115 250	0.272 0.383	266		(Pipe | 90 flow= | 6.326 Grate | 0.63 flow)	375(2)	0.81 (1.26)	0.11		Qg 0.090 Qo 0.090 Do 375 CHRT 32: Vo2/2gDo 0.09 H/Do 0.73 Kg side flow 5.86 end flow 4.54	0.033	5.86	0.196			5.86	0.196	0.26	0.017			8.315 8.275	8.588 8.571	8.784		8.784	8.940	13
2 100	41	41 to 51	11;21;12;31;1 3;41			13.00 13.00	115 250		0.71 1.00	0.383 0.383	0.272 0.383	0.272 0.383	87 266	103	2.00 FLOW WIDTH/DEPTH 2.000Wd DOWNSTREAM 0.628m	206	7	90 m	13	51	14.56 14.56	109 239	1.864 2.624	1742	1735 (Pipe	1202 flow=	540 Sum	90.000 upstr	2.00 atten	525(2) flows)	2.41 (2.84)	0.62		Qg 0.085 Qo 0.540 Do 525 Routine 2.2 CHART 48 Du/Do 0.86 Qu/Qo 0.68 K 0.74 d/Do 2.0 chrt Qg/Qo 0.16 Kg 0.18 d/Do 1.5 chrt Qg/Qo 0.16 Kg 0.20 d/Do 1.00 Interp value Kg 0.22 Ku=Kw= 0.97 Combined pipes in line case Join Pipes:	0.296	0.97	0.287		13 and 31 Vel1 2.324 Vel2 0.772 Eq Dia 533 Angle 163 Flow 0.455 CHART 33 Angle 0 S/Do 2.5 Du/Do 1.02 Qg/Qo 0.16 K 0.69 S/Do 1.48 cor 0.18 Ku 0.87 Kw 0.87 Interpolated Ku= 0.97 Kw= 0.97	0.97	0.287	1.44	1.299	0.378	3.19	8.284 6.484	8.284 6.669	8.571		8.571	8.940	41
2 100	14	14 to 51	14			13.00 13.00	115 250		0.71 1.00	0.383 0.383	0.272 0.383	0.272 0.383	87 266	100	2.00 FLOW WIDTH/DEPTH 1.973Wd DOWNSTREAM 0.591m	206	7	88 m	12	15	13.00 13.00	115 250	0.272 0.383	266		(Pipe | 88 flow= | 6.326 Grate | 0.63 flow)	375(2)	0.80 (1.26)	0.11		Qg 0.088 Qo 0.088 Do 375 CHRT 32: Vo2/2gDo 0.09 H/Do 0.45 Kg side flow 6.75 end flow 5.19	0.033	6.75	0.220			6.75	0.220	0.25	0.016			6.515 6.475	6.685 6.669	6.905		6.905	7.140	14
2 100	51	51 to 61	11;21;12;31;1 3;41;14;51			13.00 13.00	115 250		0.71 1.00	0.383 0.383	0.272 0.383	0.272 0.383	87 266	100	2.00 FLOW WIDTH/DEPTH 1.973Wd DOWNSTREAM 0.591m	206	7	88 m	12	61	15.18 15.18	107 234	2.408 3.390	2203	1735 (Pipe	1509 flow=	694 Sum	90.000 upstr	1.99 atten	600(2) flows)	2.38 (3.09)	0.63		Qg 0.082 Qo 0.694 Do 600 Routine 2.2 CHART 48 Du/Do 0.88 Qu/Qo 0.76 K 0.50 d/Do 2.0 chrt Qg/Qo 0.12 Kg 0.11 d/Do 1.5 chrt Qg/Qo 0.12 Kg 0.11 d/Do 1.00 Interp value Kg 0.12 Ku=Kw= 0.62 Combined pipes in line case Join Pipes:	0.289	0.62	0.179		14 and 41 Vel1 2.450 Vel2 0.741 Eq Dia 592 Angle 167 Flow 0.612 CHART 33 Angle 0 S/Do 2.5 Du/Do 0.99 Qg/Qo 0.12 K 0.56 S/Do 1.34 cor 0.16 Ku 0.72 Kw 0.72 Interpolated Ku= 0.62 Kw= 0.62	0.62	0.179	1.17	1.054	0.401	3.41	6.490 4.700	6.490 4.789	6.669		6.669	7.140	51
2 100	15	15 to 61	15			13.00 13.00	115 250		0.71 1.00	0.383 0.383	0.272 0.383	0.272 0.383	87 266	99	2.00 FLOW WIDTH/DEPTH 1.964Wd DOWNSTREAM 0.591m	206	7	87 m	12	61	13.00 13.00	115 250	0.272 0.383	266		(Pipe | 87 flow= | 6.326 Grate | 0.63 flow)	375(2)	0.79 (1.26)	0.11		Qg 0.087 Qo 0.087 Do 375 CHRT 32: Vo2/2gDo 0.08 H/Do 0.24 Kg side flow 7.48 end flow 5.72	0.032	7.48	0.238			7.48	0.238	0.25	0.016			4.715 4.675	4.805 4.789	5.043		5.043	5.340	15
2 100	61	61 to 71	11;21;12;31;1 3;41;14;51;15 ;61			13.00 13.00	115 250		0.71 1.00	0.383 0.383	0.272 0.383	0.272 0.383	87 266	111 Maj 1352	2.00 FLOW WIDTH/DEPTH 2.071Wd DOWNSTREAM 0.728m	206	7	95 m	16 139)		15.81 15.81	105 230	2.952 4.156	2655	1735 (Pipe	1735 flow=	920 Sum	9.425 upstream	2.02 flows)	750(2)	2.02 (3.61)	0.08		Qg 0.139 Qo 0.920 Do 750 Routine 2.2 CHART 48 Du/Do 0.80 Qu/Qo 0.75 K 0.24 d/Do 2.0 chrt Qg/Qo 0.15 Kg 0.15 d/Do 1.5 chrt Qg/Qo 0.15 Kg 0.17 d/Do 1.00 Interp value Kg 0.19 Ku=Kw= 0.42 Combined pipes in line case Join Pipes:	0.208	0.42	0.087		15 and 51 Vel1 2.455 Vel2 0.788 Eq Dia 662 Angle 169 Flow 0.781 CHART 33 Angle 0 S/Do 2.5 Du/Do 0.88 Qg/Qo 0.15 K 0.44 S/Do 1.18 cor 0.23 Ku 0.67 Kw 0.67 Interpolated Ku= 0.42 Kw= 0.42	0.42	0.087	0.63	0.059	0.407	3.71	4.702 4.512	4.702 4.500	4.789		4.789	5.340	61

UNLOCK INLET CAPACITY - to reduce overland flow at 61
Major ARI gutter flow: Crit Inlet 230mm/h @ 61
50% of atten. major ARI catchment runoff from 61 = 122 (Catchment flow 266 x 230/250 x 50%)
50% of atten. major ARI catchment runoff from 15 = 244 (Catchment flow 266 x 230/250 x 50%)
50% of total atten. overland flow for 51 = 986 (O/land flow 1509 x 230/234 x 50%)
Total major ARI gutter flow 1352

Q5 HD RES (1 IN 500 ROAD GRADE) DRAINAGE CALCS (SHT 1 OF 2)

LOCATION					TIME			SUB-CATCHMENT RUNOFF						INLET DESIGN							DRAIN DESIGN												HEADLOSSES										PART FULL		DESIGN LEVELS					
						tc	I	C10	C	A	C×A	+CA	Q					Qg	Qb		tc	I	+CA	Qt	Qm	Qs	Qp	L	S		V	T			V2/2g	Ku	hu	Kl	hl	Kw	hw	Sf	hf		Vp						
DESIGN ARI	STRUCTURE No.	DRAIN SECTION	SUB-CATCHMENTS CONTRIBUTING	LAND USE	SLOPE OF CATCHMENT	SUB-CATCHMENT TIME OF CONC.	RAINFALL INTENSITY	10yr RUNOFF CO-EFFICIENT	CO-EFFICIENT OF RUNOFF	SUB-CATCHMENT AREA	EQUIVALENT AREA	SUM OF (C × A)	SUB-CATCHMENT DISCHARGE	FLOW IN K&C (INC. BYPASS)	ROAD GRADE AT INLET	MINOR FLOW ROAD CAPACITY	INLET TYPE	FLOW INTO INLET	BYPASS FLOW	BYPASS STRUCTURE No.	CRITICAL TIME OF CONC.	RAINFALL INTENSITY	TOTAL (C × A)	MAJOR TOTAL FLOW	MAJOR SURFACE FLOW CAPACITY	MAJOR SURFACE FLOW	PIPE FLOW	REACH LENGTH	PIPE GRADE	PIPE / BOX DIMENSIONS (CLASS)	FLOW VELOCITY FULL (PIPE GRADE VELOCITY)	TIME OF FLOW IN REACH	STRUCTURE CHART No.	STRUCTURE RATIOS FOR 'K' VALUE CALCULATIONS	VELOCITY HEAD	U/S HEADLOSS COEFFICIENT	U/S PIPE STRUCT. HEADLOSS	LAT. HEADLOSS CO-EFFICIENT	LAT. PIPE STRUCT. HEADLOSS	W.S.E CO-EFFICIENT	CHANGE IN W.S.E	PIPE FRICTION SLOPE	PIPE FRICTION HEADLOSS (L × Sf)	DEPTH	VELOCITY	OBVERT LEVELS	DRAIN SECTION H.G.L	UPSTREAM H.G.L	LAT. H.G.L	W.S.E.	SURFACE OR K&C INVERT LEVEL	STRUCTURE No.
yrs					%	min	mm/h			ha	ha	ha	l/s	l/s	%	l/s		l/s	l/s		min	mm/h	ha	l/s	l/s	l/s	l/s	m	%	mm	m/s	min			m		m		m		m	%	m	m	m/s	m	m	m	m	m	m	
5 100	11	11 to 21	11			10.00 10.00	162 278		0.83 1.00	0.164 0.164	0.136 0.164	0.136 0.164	61 127	61 FLOW WIDTH/DEPTH	0.20	69 2.591Wd	7	61 m	0	12	10.00 10.00	162 278	0.136 0.164	127		(Pipe	61 flow=	6.326 Grate	0.63 flow)	375(2	0.55 (1.26)	0.11		Qg 0.061 Qo 0.061 Do 375 CHRT 32: Vo2/2gDo 0.04 H/Do 1.07 Kg side flow 5.64 end flow 4.26	0.015	5.64	0.087			5.64	0.087	0.12	0.008			5.435 5.395	5.836 5.828	5.923		5.923	6.070	11
5 100	21	21 to 31	11;21			10.00 10.00	162 278		0.83 1.00	0.164 0.164	0.136 0.164	0.136 0.164	61 127	61 FLOW WIDTH/DEPTH	0.20	69 2.591Wd	7	61 m	0	31	10.11 10.11	162 276	0.272 0.328	251	1266	129 (Pipe flow= | 122 Sum | 36.000 upstr atten | 0.25 flows)	450(2	0.77 (0.90)	0.60		Qg 0.061 Qo 0.122 Do 450 Angle 90 Chart 47 S/Do 2.5 chartdeg Du/Do 0.83 K0 2.07 K0.5 2.30 Qu/Qo 0.50 Cg 1.00 K 2.30 S/Do 2.0 K0 2.48 K0.5 2.40 K 2.40 S/Do 1.5 K0 2.70 K0.5 2.70 K 2.70	0.030	2.02	0.061	Interp	val for S/Do	2.40 2.00 Kw 2.40 CHART 46 1.97 K0.5 2.02 K 2.02 2.09 K0.5 2.31 K 2.31 val for S/Do 2.00 Ku 2.02		0.073	0.18	0.066			5.390 5.300	5.767 5.701	5.828		5.840	6.070	21
5 100	12	12 to 31	12			10.00 10.00	162 278		0.83 1.00	0.153 0.153	0.127 0.153	0.127 0.153	57 118	57 FLOW WIDTH/DEPTH	0.20	69 2.515Wd	7	57 m	0	13	10.00 10.00	162 278	0.127 0.153	118		(Pipe	57 flow=	6.326 Grate	0.63 flow)	375(2	0.52 (1.26)	0.11		Qg 0.057 Qo 0.057 Do 375 CHRT 32: Vo2/2gDo 0.04 H/Do 0.89 Kg side flow 6.37 end flow 4.71	0.014	6.37	0.087			6.37	0.087	0.11	0.007			5.375 5.335	5.708 5.701	5.795		5.795	6.000	12
5 100	31	31 to 41	11;21;12;31			10.00 10.00	162 278		0.83 1.00	0.153 0.153	0.127 0.153	0.127 0.153	57 118	57 FLOW WIDTH/DEPTH	0.20	69 2.515Wd	7	57 m	0	41	10.71 10.71	158 270	0.526 0.634	476	1266	245 (Pipe flow=	230 Sum	36.000 upstr atten	0.22 flows)	525(2	1.03 (0.95)	0.58		Qg 0.056 Qo 0.230 Do 525 Routine 2.2 CHART 48 Du/Do 0.86 Qu/Qo 0.52 K 1.26 d/Do 2.0 chrt Qg/Qo 0.24 Kg 0.34 d/Do 1.5 chrt Qg/Qo 0.24 Kg 0.40 d/Do 1.58 Interp value Kg 0.39 Ku=Kw= 1.65 Combined pipes in line case Join Pipes:	0.054	1.65	0.090	12 and 21 Eq Dia 575 Angle 151 Flow CHART 33 Angle 0 S/Do 2.5 S/Do 1.69 con	Vel1 0.748 Vel2 0.503 Du/Do 1.10 Qg/Qo 0.24 K 0.93 Interpolated Ku= 1.65 Kw= 1.65	1.65	0.090	0.26 0.175 Du/Qo 0.20 Ku 1.13 Kw 1.13	0.094			5.304 5.224	5.611 5.517	5.701		5.701	6.000	31
5 100	13	13 to 41	13			10.00 10.00	162 278		0.83 1.00	0.153 0.153	0.127 0.153	0.127 0.153	57 118	57 FLOW WIDTH/DEPTH	0.20	69 2.515Wd	7	57 m	0	14	10.00 10.00	162 278	0.127 0.153	118		(Pipe	57 flow=	6.326 Grate	0.63 flow)	375(2	0.52 (1.26)	0.11		Qg 0.057 Qo 0.057 Do 375 CHRT 32: Vo2/2gDo 0.04 H/Do 0.58 Kg side flow 7.57 end flow 5.50	0.014	7.57	0.104			7.57	0.104	0.11	0.007			5.305 5.265	5.524 5.517	5.628		5.628	5.930	13
5 100	41	41 to 51	11;21;12;31;1 3;41			10.00 10.00	162 278		0.83 1.00	0.153 0.153	0.127 0.153	0.127 0.153	57 118	57 FLOW WIDTH/DEPTH	0.20	69 2.515Wd	7	57 m	0	51	11.29 11.29	155 265	0.780 0.940	692	1266	357 (Pipe flow=	335 Sum	27.000 upstr atten	0.22 flows)	600(2	1.15 (1.03)	0.39		Qg 0.055 Qo 0.335 Do 600 Routine 2.2 CHART 48 Du/Do 0.88 Qu/Qo 0.67 K 0.83 d/Do 2.0 chrt Qg/Qo 0.16 Kg 0.20 d/Do 1.5 chrt Qg/Qo 0.16 Kg 0.22 d/Do 1.35 Interp value Kg 0.23 Ku=Kw= 1.06 Combined pipes in line case Join Pipes:	0.067	1.06	0.071	13 and 31 Eq Dia 617 Angle 162 Flow CHART 33 Angle 0 S/Do 2.5 S/Do 1.45 con	Vel1 1.043 Vel2 0.494 Du/Do 1.03 Qg/Qo 0.16 K 0.70 Interpolated Ku= 1.06 Kw= 1.06	1.06	0.071	0.27 0.280 Du/Qo 0.19 Ku 0.89 Kw 0.89	0.074			5.230 5.170	5.446 5.372	5.517		5.517	5.930	41
5 100	14	14 to 51	14			10.00 10.00	162 278		0.83 1.00	0.115 0.115	0.095 0.115	0.095 0.115	43 89	43 FLOW WIDTH/DEPTH	0.20	69 2.217Wd	7	43 m	0	15	10.00 10.00	162 278	0.095 0.115	89		(Pipe	43 flow=	6.326 Grate	0.63 flow)	375(2	0.39 (1.26)	0.11		Qg 0.043 Qo 0.043 Do 375 CHRT 32: Vo2/2gDo 0.02 H/Do 0.35 Kg side flow 8.89 end flow 6.31	0.008	8.89	0.069			8.89	0.069	0.06	0.004			5.245 5.205	5.376 5.372	5.445		5.445	5.870	14
5 100	51	51 to 61	11;21;12;31;1 3;41;14;51			10.00 10.00	162 278		0.83 1.00	0.115 0.115	0.095 0.115	0.095 0.115	43 89	43 FLOW WIDTH/DEPTH	0.20	69 2.217Wd	7	43 m	0	61	11.68 11.68	153 261	0.970 1.170	848	1266	436 (Pipe flow=	412 Sum	27.000 upstr atten	0.22 flows)	750(2	0.90 (1.20)	0.45		Qg 0.041 Qo 0.412 Do 750 Routine 2.2 CHART 48 Du/Do 0.80 Qu/Qo 0.80 K 0.01 d/Do 2.0 chrt Qg/Qo 0.10 Kg 0.07 d/Do 1.5 chrt Qg/Qo 0.10 Kg 0.06 d/Do 1.26 Interp value Kg 0.06 Ku=Kw= 0.07 Combined pipes in line case Join Pipes:	0.041	0.07	0.003	14 and 41 Eq Dia 661 Angle 170 Flow CHART 33 Angle 0 S/Do 2.5 S/Do 1.28 con	Vel1 1.169 Vel2 0.368 Du/Do 0.88 Qg/Qo 0.10 K 0.24 Interpolated Ku= 0.07 Kw= 0.07	0.07	0.003	0.13 0.371 Du/Qo 0.14 Ku 0.38 Kw 0.38	0.034			5.172 5.112	5.369 5.335	5.372		5.372	5.870	51
5 100	15	15 to 61	15			10.00 10.00	162 278		0.83 1.00	0.115 0.115	0.095 0.115	0.095 0.115	43 89	43 FLOW WIDTH/DEPTH	0.20	69 2.217Wd	7	43 m	0	16	10.00 10.00	162 278	0.095 0.115	89		(Pipe	43 flow=	6.326 Grate	0.63 flow)	375(2	0.39 (1.26)	0.11		Qg 0.043 Qo 0.043 Do 375 CHRT 32: Vo2/2gDo 0.02 H/Do 0.38 Kg side flow 8.76 end flow 6.22	0.008	8.76	0.068			8.76	0.068	0.06	0.004			5.195 5.155	5.339 5.335	5.407		5.407	5.820	15
5 100	61	61 to 71	11;21;12;31;1 3;41;14;51;15 ;61			10.00 10.00	162 278		0.83 1.00	0.115 0.115	0.095 0.115	0.095 0.115	43 89	43 FLOW WIDTH/DEPTH	0.20	69 2.217Wd	7	43 m	0	71	12.13 12.13	151 257	1.160 1.400	999	1266	513 (Pipe flow=	487 Sum	36.000 upstr atten	0.22 flows)	750(2	1.07 (1.20)	0.56		Qg 0.040 Qo 0.487 Do 750 Routine 2.2 CHART 48 Du/Do 1.00 Qu/Qo 0.84 K 0.68 d/Do 2.0 chrt Qg/Qo 0.08 Kg 0.08 d/Do 1.5 chrt Qg/Qo 0.08 Kg 0.08 d/Do 1.24 Interp value Kg 0.07 Ku=Kw= 0.75 Combined pipes in line case Join Pipes:	0.058	0.75	0.044	15 and 51 Eq Dia 808 Angle 171 Flow CHART 33 Angle 0 S/Do 2.5 S/Do 1.28 con	Vel1 0.920 Vel2 0.363 Du/Do 1.08 Qg/Qo 0.08 K 0.46 Interpolated Ku= 0.75 Kw= 0.75	0.75	0.044	0.18 0.446 Du/Qo 0.12 Ku 0.58 Kw 0.58	0.063			5.112 5.032	5.291 5.228	5.335		5.335	5.820	61
5 100	16	16 to 71	16			10.00 10.00	162 278		0.83 1.00	0.153 0.153	0.127 0.153	0.127 0.153	57 118	57 FLOW WIDTH/DEPTH	0.20	69 2.515Wd	7	57 m	0	17	10.00 10.00	162 278	0.127 0.153	118		(Pipe	57 flow=	6.326 Grate	0.63 flow)	375(2	0.52 (1.26)	0.11		Qg 0.057 Qo 0.057 Do 375 CHRT 32: Vo2/2gDo 0.04 H/Do 0.29 Kg side flow 8.66 end flow 6.24	0.014	8.66	0.119			8.66	0.119	0.11	0.007			5.125 5.085	5.235 5.228	5.354		5.354	5.750	16
5 100	71	71 to 81	11;21;12;31;1 3;41;14;51;15 ;61;16;71			10.00 10.00	162 278		0.83 1.00	0.153 0.153	0.127 0.153	0.127 0.153	57 118	57 FLOW WIDTH/DEPTH	0.20	69 2.515Wd	7	57 m	0	81	12.69 12.69	148 253	1.414 1.706	1199	1266	618 (Pipe flow=	581 Sum	36.000 upstr atten	0.22 flows)	825(2	1.05 (1.28)	0.57		Qg 0.052 Qo 0.581 Do 825 Routine 2.2 CHART 48 Du/Do 0.91 Qu/Qo 0.82 K 0.43 d/Do 2.0 chrt Qg/Qo 0.09 Kg 0.08 d/Do 1.5 chrt Qg/Qo 0.09 Kg 0.07 d/Do 1.21 Interp value Kg 0.07 Ku=Kw= 0.49 Combined pipes in line case Join Pipes:	0.056	0.49	0.028	16 and 61 Eq Dia 812 Angle 171 Flow CHART 33 Angle 0 S/Do 2.5 S/Do 1.25 con	Vel1 1.079 Vel2 0.471 Du/Do 0.98 Qg/Qo 0.09 K 0.47 Interpolated Ku= 0.49 Kw= 0.49	0.49	0.028	0.15 0.529 Du/Qo 0.13 Ku 0.60 Kw 0.60	0.054			5.028 4.948	5.200 5.146	5.228		5.228	5.750	71
5 100	17	17 to 81	17			10.00 10.00	162 278		0.83 1.00	0.153 0.153	0.127 0.153	0.127 0.153	57 118	57 FLOW WIDTH/DEPTH	0.20	69 2.515Wd	7	57 m	0	18	10.00 10.00	162 278	0.127 0.153	118		(Pipe	57 flow=	6.326 Grate	0.63 flow)	375(2	0.52 (1.26)	0.11		Qg 0.057 Qo 0.057 Do 375 CHRT 32: Vo2/2gDo 0.04 H/Do 0.29 Kg side flow 8.68 end flow 6.26	0.014	8.68	0.119			8.68	0.119	0.11	0.007			5.045 5.005	5.153 5.146	5.272		5.272	5.670	17
5 100	81	81 to 91	11 to 71;17;8 1			10.00 10.00	162 278		0.83 1.00	0.153 0.153	0.127 0.153	0.127 0.153	57 118	57 FLOW WIDTH/DEPTH	0.20	69 2.515Wd	7	57 m	0	91	13.26 13.26	145 248	1.668 2.012	1386	1266	715 (Pipe flow=	671 Sum	36.000 upstr atten	0.22 flows)	825(2	1.22 (1.28)	0.49		Qg 0.051 Qo 0.671 Do 825 Routine 2.2 CHART 48 Du/Do 1.00 Qu/Qo 0.85 K 0.65 d/Do 2.0 chrt Qg/Qo 0.08 Kg 0.08 d/Do 1.5 chrt Qg/Qo 0.08 Kg 0.07 d/Do 1.17 Interp value Kg 0.07 Ku=Kw= 0.71 Combined pipes in line case Join Pipes:	0.076	0.71	0.053	17 and 71 Eq Dia 881 Angle 172 Flow CHART 33 Angle 0 S/Do 2.5 S/Do 1.22 con	Vel1 1.065 Vel2 0.462 Du/Do 1.07 Qg/Qo 0.08 K 0.44 Interpolated Ku= 0.71 Kw= 0.71	0.71	0.053	0.20 0.620 Du/Qo 0.11 Ku 0.55 Kw 0.55	0.073			4.948 4.868	5.093 5.020	5.146		5.146	5.670	81

Q5 HD RES (1 IN 500 ROAD GRADE) DRAINAGE CALCS (SHT 2 OF 2)

LOCATION					TIME			SUB-CATCHMENT RUNOFF						INLET DESIGN							DRAIN DESIGN													HEADLOSSES										PART FULL		DESIGN LEVELS						
						tc	I	C10	C	A	C×A	+CA	Q					Qg	Qb		tc	I	+CA	Qt	Qm	Qs	Qp	L	S		V	T			V2/2g	Ku	hu	Kl	hl	Kw	hw	Sf	hf		Vp							
DESIGN ARI	STRUCTURE No.	DRAIN SECTION	SUB-CATCHMENTS CONTRIBUTING	LAND USE	SLOPE OF CATCHMENT	SUB-CATCHMENT TIME OF CONC.	RAINFALL INTENSITY	10yr RUNOFF CO-EFFICIENT	CO-EFFICIENT OF RUNOFF	SUB-CATCHMENT AREA	EQUIVALENT AREA	SUM OF (C × A)	SUB-CATCHMENT DISCHARGE	FLOW IN K&C (INC. BYPASS)	ROAD GRADE AT INLET	MINOR FLOW ROAD CAPACITY	INLET TYPE	FLOW INTO INLET	BYPASS FLOW	BYPASS STRUCTURE No.	CRITICAL TIME OF CONC.	RAINFALL INTENSITY	TOTAL (C × A)	MAJOR TOTAL FLOW	MAJOR SURFACE FLOW CAPACITY	MAJOR SURFACE FLOW	PIPE FLOW	REACH LENGTH	PIPE GRADE	PIPE / BOX DIMENSIONS (CLASS)	FLOW VELOCITY FULL (PIPE GRADE VELOCITY)	TIME OF FLOW IN REACH	STRUCTURE CHART No.	STRUCTURE RATIOS FOR 'K' VALUE CALCULATIONS	VELOCITY HEAD	U/S HEADLOSS COEFFICIENT	U/S PIPE STRUCT. HEADLOSS	LAT. HEADLOSS CO-EFFICIENT	LAT. PIPE STRUCT. HEADLOSS	W.S.E CO-EFFICIENT	CHANGE IN W.S.E	PIPE FRICTION SLOPE	PIPE FRICTION HEADLOSS (L × Sf)	DEPTH	VELOCITY	OBVERT LEVELS	DRAIN SECTION H.G.L	UPSTREAM H.G.L	LAT. H.G.L	W.S.E.	SURFACE OR K&C INVERT LEVEL	STRUCTURE No.
yrs					%	min	mm/h			ha	ha	ha	l/s	l/s	%	l/s		l/s	l/s		min	mm/h	ha	l/s	l/s	l/s	l/s	m	%	mm	m/s	min			m		m		m		m	%	m	m	m/s	m	m	m	m	m	m	
5 100	18	18 to 91	18			10.00 10.00	162 278		0.83 1.00	0.153 0.153	0.127 0.153	0.127 0.153	57 118	57 FLOW WIDTH/DEPTH	0.20	69	7 2.515Wd	57 m	0	19	10.00 10.00	162 278	0.127 0.153	118		(Pipe	57 flow=	6.326 Grate	0.63 flow)	375(2)	0.52 (1.26)	0.11		Qg 0.057 Qo 0.057 Do 375 CHRT 32: Vo2/2gDo 0.04 H/Do 0.14 Kg side flow 9.23 end flow 6.62	0.014	9.23	0.127			9.23	0.127	0.11	0.007			4.975 4.935	5.027 5.020	5.154		5.154	5.600	18
5 100	91	91 to 101	11 to 71;17;8 1;18;91			10.00 10.00	162 278		0.83 1.00	0.153 0.153	0.127 0.153	0.127 0.153	57 118	57 FLOW WIDTH/DEPTH	0.20	69	7 2.515Wd	57 m	0	101	13.75 13.75	162 244	1.922 2.318	1571	1266 (Pipe	808 flow=	763 Sum	36.000 upstr	0.22 atten	900(2) flows)	1.16 (1.36)	0.52		Qg 0.050 Qo 0.763 Do 900 Routine 2.2 CHART 48 Du/Do 0.92 Qu/Qo 0.87 K 0.30 d/Do 2.0 chrt Qg/Qo 0.07 Kg 0.06 d/Do 1.5 chrt Qg/Qo 0.07 Kg 0.05 d/Do 1.14 Interp value Kg 0.05 Ku=Kw= 0.34 Combined pipes in line case Join Pipes:	0.069	0.34	0.023		18 and 81 Vel1 1.238 Vel2 0.456 Eq Dia 875 Angle 173 Flow 0.712 CHART 33 Angle 0 S/Do 2.5 Du/Do 0.97 Qg/Qo 0.07 K 0.37 S/Do 1.18 cor 0.10 Ku 0.47 Kw 0.47 Interpolated Ku= 0.34 Kw= 0.34	0.34	0.023	0.16	0.059			4.865 4.785	4.997 4.938	5.020		5.020	5.600	91
5 100	19	19 to 101	19			10.00 10.00	162 278		0.83 1.00	0.153 0.153	0.127 0.153	0.127 0.153	57 118	57 FLOW WIDTH/DEPTH	0.20	69	7 2.515Wd	57 m	0	110	10.00 10.00	162 278	0.127 0.153	118		(Pipe	57 flow=	6.326 Grate	0.63 flow)	375(2)	0.52 (1.26)	0.11		Qg 0.057 Qo 0.057 Do 375 CHRT 32: Vo2/2gDo 0.04 H/Do 0.11 Kg side flow 9.35 end flow 6.70	0.014	9.35	0.129			9.35	0.129	0.11	0.007			4.905 4.865	4.945 4.938	5.074		5.074	5.530	19
5 100	101	101 to 111	11 to 71;17;8 1;18;91;19;10 1			10.00 10.00	162 278		0.83 1.00	0.153 0.153	0.127 0.153	0.127 0.153	57 118	57 FLOW WIDTH/DEPTH	0.20	69	7 2.515Wd	57 m	0	111	14.27 14.27	141 241	2.176 2.624	1757	1266 (Pipe	905 flow=	851 Sum	36.000 upstr	0.22 atten	900(2) flows)	1.29 (1.36)	0.47		Qg 0.050 Qo 0.851 Do 900 Routine 2.2 CHART 48 Du/Do 1.00 Qu/Qo 0.88 K 0.55 d/Do 2.0 chrt Qg/Qo 0.06 Kg 0.06 d/Do 1.5 chrt Qg/Qo 0.06 Kg 0.05 d/Do 1.11 Interp value Kg 0.05 Ku=Kw= 0.60 Combined pipes in line case Join Pipes:	0.085	0.60	0.051		19 and 91 Vel1 1.182 Vel2 0.449 Eq Dia 947 Angle 174 Flow 0.802 CHART 33 Angle 0 S/Do 2.5 Du/Do 1.05 Qg/Qo 0.06 K 0.39 S/Do 1.16 cor 0.09 Ku 0.48 Kw 0.48 Interpolated Ku= 0.60 Kw= 0.60	0.60	0.051	0.20	0.073			4.785 4.705	4.887 4.814	4.938		4.938	5.530	101
5 100	110	110 to 111	110			10.00 10.00	162 278		0.83 1.00	0.153 0.153	0.127 0.153	0.127 0.153	57 118	57 FLOW WIDTH/DEPTH	0.20	69	7 2.515Wd	57 m	0	112	10.00 10.00	162 278	0.127 0.153	118		(Pipe	57 flow=	6.326 Grate	0.63 flow)	375(2)	0.52 (1.26)	0.11		Qg 0.057 Qo 0.057 Do 375 CHRT 32: Vo2/2gDo 0.04 H/Do 0.00 Kg side flow 9.74 end flow 6.98 Part full downstream pipe	0.014	1.00	0.014			1.00 Upstream HGL 4.835 below pipe obv 4.835 Set Kg to 1	0.014	0.11 outlet	0.007	0.167	1.20	4.835 4.795	4.821 4.814	4.835		4.835	5.460	110
5 100	111	111 to 121	11 to 71;17;8 1;18;91;19;10 1;110;111			10.00 10.00	162 278		0.83 1.00	0.153 0.153	0.127 0.153	0.127 0.153	57 118	57 FLOW WIDTH/DEPTH	0.20	69	7 2.515Wd	57 m	0	121	14.74 14.74	139 237	2.430 2.930	1929	1266 (Pipe	992 flow=	937 Sum	36.000 upstr	0.22 atten	900(2) flows)	1.42 (1.36)	0.42		Qg 0.049 Qo 0.937 Do 900 Routine 2.1 CHART 48 Du/Do 1.00 Qu/Qo 0.90 K 0.51 d/Do 2.0 chrt Qg/Qo 0.05 Kg 0.05 d/Do 1.5 chrt Qg/Qo 0.05 Kg 0.05 d/Do 1.06 Interp value Kg 0.04 Ku=Kw= 0.56 Combined pipes in line case Join Pipes:	0.103	0.56	0.058		101 and 110 Vel1 1.319 Vel2 0.443 Eq Dia 943 Angle 175 Flow 0.888 CHART 33 Angle 0 S/Do 2.5 Du/Do 1.05 Qg/Qo 0.05 K 0.38 S/Do 1.11 cor 0.09 Ku 0.47 Kw 0.47 Interpolated Ku= 0.56 Kw= 0.56	0.56	0.058	0.25	0.088			4.705 4.625	4.756 4.668	4.814		4.814	5.460	111
5 100	112	112 to 121	112			10.00 10.00	162 278		0.83 1.00	0.153 0.153	0.127 0.153	0.127 0.153	57 118	57 FLOW WIDTH/DEPTH	0.20	69	7 2.515Wd	57 m	0	113	10.00 10.00	162 278	0.127 0.153	118		(Pipe	57 flow=	6.326 Grate	0.63 flow)	375(2)	0.52 (1.26)	0.11		Qg 0.057 Qo 0.057 Do 375 CHRT 32: Vo2/2gDo 0.04 H/Do 0.00 Kg side flow 9.74 end flow 6.98 Part full downstream pipe	0.014	1.00	0.020			1.00 Upstream HGL 4.695 below pipe obv 4.765 Set Kg to 1	0.020	0.11 outlet	0.007	0.167	1.20	4.765 4.725	4.675 4.668	4.695		4.695	5.390	112
5 100	121	121 to 131	11 to 111;112 ;121			10.00 10.00	162 278		0.83 1.00	0.153 0.153	0.127 0.153	0.127 0.153	57 118	57 FLOW WIDTH/DEPTH	0.20	69	7 2.515Wd	57 m	0	131	15.16 15.16	137 235	2.684 3.236	2112	1266 (Pipe	1093 flow=	1020 Sum	36.000 upstr	0.22 atten	1050(2) flows)	1.14 (1.50)	0.53		Qg 0.048 Qo 1.020 Do 1050 Flow 112 made eqv grate flow CHART 33 Angle 0 S/Do 2.5	0.066	0.27	0.018			0.27 Du/Do 0.86 Qg/Qo 0.09 K 0.11 S/Do 1.04 cor 0.16 Ku 0.27 Kw 0.27 K vals above for stepped pipes as grate flow	0.018	0.13	0.046			4.626 4.546	4.650 4.604	4.668		4.668	5.390	121
5 100	113	113 to 131	113			10.00 10.00	162 278		0.83 1.00	0.153 0.153	0.127 0.153	0.127 0.153	57 118	57 FLOW WIDTH/DEPTH	0.20	69	7 2.515Wd	57 m	0	114	10.00 10.00	162 278	0.127 0.153	118		(Pipe	57 flow=	6.326 Grate	0.63 flow)	375(2)	0.52 (1.26)	0.11		Qg 0.057 Qo 0.057 Do 375 CHRT 32: Vo2/2gDo 0.04 H/Do 0.00 Kg side flow 9.74 end flow 6.98 Part full downstream pipe	0.014	1.00	0.018			1.00 Upstream HGL 4.629 below pipe obv 4.685 Set Kg to 1	0.018	0.11 outlet	0.007	0.167	1.20	4.685 4.645	4.611 4.604	4.629		4.629	5.310	113
5 100	131	131 to 141	11 to 111;112 ;121;113;131			10.00 10.00	162 278		0.83 1.00	0.153 0.153	0.127 0.153	0.127 0.153	57 118	57 FLOW WIDTH/DEPTH	0.20	69	7 2.515Wd	57 m	0	141	15.69 15.69	135 231	2.938 3.542	2273	1266 (Pipe	1173 flow=	1100 Sum	36.000 upstr	0.19 atten	1050(2) flows)	1.23 (1.40)	0.49		Qg 0.047 Qo 1.100 Do 1050 Flow 113 made eqv grate flow CHART 33 Angle 0 S/Do 2.5	0.077	0.62	0.048			0.62 Du/Do 1.00 Qg/Qo 0.09 K 0.47 S/Do 1.05 cor 0.15 Ku 0.62 Kw 0.62 K vals above for stepped pipes as grate flow	0.048	0.15	0.054			4.546 4.476	4.556 4.502	4.604		4.604	5.310	131
5 100	114	114 to 141	114			10.00 10.00	162 278		0.83 1.00	0.153 0.153	0.127 0.153	0.127 0.153	57 118	57 FLOW WIDTH/DEPTH	0.20	69	7 2.515Wd	57 m	0	115	10.00 10.00	162 278	0.127 0.153	118		(Pipe	57 flow=	6.326 Grate	0.63 flow)	375(2)	0.52 (1.26)	0.11		Qg 0.057 Qo 0.057 Do 375 CHRT 32: Vo2/2gDo 0.04 H/Do 0.00 Kg side flow 9.74 end flow 6.98 Part full downstream pipe	0.014	1.00	0.023			1.00 Upstream HGL 4.532 below pipe obv 4.615 Set Kg to 1	0.023	0.11 outlet	0.007	0.167	1.20	4.615 4.575	4.509 4.502	4.532		4.532	5.240	114
5 100	141	141 to 151	11 to 111;112 ;121;113;131; 114;141			10.00 10.00	162 278		0.83 1.00	0.153 0.153	0.127 0.153	0.127 0.153	57 118	57 FLOW WIDTH/DEPTH	0.20	69	7 2.515Wd	57 m	0	151	16.18 16.18	134 228	3.192 3.848	2437	1266 (Pipe	1251 flow=	1186 Sum	36.000 upstr	0.19 atten	1200(2) flows)	1.02 (1.54)	0.59		Qg 0.047 Qo 1.186 Do 1200 Flow 114 made eqv grate flow CHART 33 Angle 0 S/Do 2.5	0.053	0.26	0.013			0.26 Du/Do 0.88 Qg/Qo 0.08 K 0.12 S/Do 1.02 cor 0.14 Ku 0.26 Kw 0.26 K vals above for stepped pipes as grate flow	0.013	0.09	0.031			4.479 4.409	4.489 4.458	4.502		4.502	5.240	141
5 100	115	115 to 151	115			10.00 10.00	162 278		0.83 1.00	0.153 0.153	0.127 0.153	0.127 0.153	57 118	57 FLOW WIDTH/DEPTH	0.20	69	7 2.515Wd	57 m	0	151	10.00 10.00	162 278	0.127 0.153	118		(Pipe	57 flow=	6.326 Grate	0.63 flow)	375(2)	0.52 (1.26)	0.11		Qg 0.057 Qo 0.057 Do 375 CHRT 32: Vo2/2gDo 0.04 H/Do 0.00 Kg side flow 9.74 end flow 6.98 Part full downstream pipe	0.014	1.00	0.019			1.00 Upstream HGL 4.484 below pipe obv 4.545 Set Kg to	0.019	0.11 outlet	0.007	0.167	1.20	4.545 4.505	4.465 4.458	4.484		4.484	5.170	115
5 100	151	151 to 161	11 to 141;115 ;151			10.00 10.00	162 278		0.83 1.00	0.153 0.153	0.127 0.153	0.127 0.153	57 118	57 Maj 857 FLOW WIDTH/DEPTH	0.20	69	7 2.515Wd	57 (UNLOCKED m	0 87)		16.77 16.77	132 225	3.446 4.154	2596	1266 (Pipe	1266 flow=	1330 Sum	9.425 upstream	0.21 flows)	1200(2)	1.14 (1.60)	0.14		Qg 0.087 Qo 1.330 Do 1200 Flow 115 made eqv grate flow CHART 33 Angle 0 S/Do 2.5	0.066	0.73	0.048			0.73 Du/Do 1.00 Qg/Qo 0.11 K 0.54 S/Do 1.04 cor 0.19 Ku 0.73 Kw 0.73 K vals above for stepped pipes as grate flow	0.048	0.11	0.010			4.409 4.389	4.410 4.400	4.458		4.458	5.170	151

UNLOCK INLET CAPACITY - to reduce overland flow at 151
Major ARI gutter flow: Crit Intn 225mm/h @ 151
50% of attn. major ARI catchment runoff from 151 = 48 (Catchment flow 118 x 225/278 x 50%)
50% of attn. major ARI catchment runoff from 115 = 96 (Catchment flow 118 x 225/278 x 50%)
50% of total attn. overland flow for 141 = 713 (O/Land flow 1251 x 225/228 x 50%)
Total major ARI gutter flow 857

Q10 HD RES (1 IN 500 ROAD GRADE) DRAINAGE CALCS (SHT 1 OF 2)

LOCATION					TIME			SUB-CATCHMENT RUNOFF						INLET DESIGN							DRAIN DESIGN												HEADLOSSES										PART FULL		DESIGN LEVELS					
						tc	I	C10	C	A	C×A	+CA	Q					Qg	Qb		tc	I	+CA	Qt	Qm	Qs	Qp	L	S		V	T			V2/2g	Ku	hu	Kl	hl	Kw	hw	Sf	hf		Vp						
DESIGN ARI	STRUCTURE No.	DRAIN SECTION	SUB-CATCHMENTS CONTRIBUTING	LAND USE	SLOPE OF CATCHMENT	SUB-CATCHMENT TIME OF CONC.	RAINFALL INTENSITY	10yr RUNOFF CO-EFFICIENT	CO-EFFICIENT OF RUNOFF	SUB-CATCHMENT AREA	EQUIVALENT AREA	SUM OF (C × A)	SUB-CATCHMENT DISCHARGE	FLOW IN K&C (INC. BYPASS)	ROAD GRADE AT INLET	MINOR FLOW ROAD CAPACITY	INLET TYPE	FLOW INTO INLET	BYPASS FLOW	BYPASS STRUCTURE No.	CRITICAL TIME OF CONC.	RAINFALL INTENSITY	TOTAL (C × A)	MAJOR TOTAL FLOW	MAJOR SURFACE FLOW CAPACITY	MAJOR SURFACE FLOW	PIPE FLOW	REACH LENGTH	PIPE GRADE	PIPE / BOX DIMENSIONS (CLASS)	FLOW VELOCITY FULL (PIPE GRADE VELOCITY)	TIME OF FLOW IN REACH	STRUCTURE CHART No.	STRUCTURE RATIOS FOR 'K' VALUE CALCULATIONS	VELOCITY HEAD	U/S HEADLOSS COEFFICIENT	U/S PIPE STRUCT. HEADLOSS	LAT. HEADLOSS CO-EFFICIENT	LAT. PIPE STRUCT. HEADLOSS	W.S.E CO-EFFICIENT	CHANGE IN W.S.E	PIPE FRICTION SLOPE	PIPE FRICTION HEADLOSS (IL × Sf)	DEPTH	VELOCITY	OBVERT LEVELS	DRAIN SECTION H.G.L	UPSTREAM H.G.L	LAT. H.G.L	W.S.E.	SURFACE OR K&C INVERT LEVEL	STRUCTURE No.
yrs					%	min	mm/h			ha	ha	ha	l/s	l/s	%	l/s		l/s	l/s		min	mm/h	ha	l/s	l/s	l/s	l/s	m	%	mm	m/s	min			m		m		m		m	%	m	m	m/s	m	m	m	m	m	m	
10 100	11	11 to 21	11			10.00 10.00	182 278		0.87 1.00	0.164 0.164	0.143 0.164	0.143 0.164	72 127	72 FLOW	0.20 WIDTH/DEPTH	69 2.783Wd	7 m	72	0	12	10.00 10.00	182 278	0.143 0.164	127			72 (Pipe	6.326 flow=	0.63 Grate	375(2 flow)	0.65 (1.26)	0.11		Qg 0.072 Qo 0.072 Do 375 CHRT 32: Vo2/2gDo 0.06 H/Do 1.04 Kg side flow 5.48 end flow 4.20	0.022	5.48	0.118			5.48	0.118	0.17	0.011			5.435 5.395	5.824 5.813	5.942		5.942	6.070	11
10 100	21	21 to 31	11;21			10.00 10.00	182 278		0.87 1.00	0.164 0.164	0.143 0.164	0.143 0.164	72 127	72 FLOW	0.20 WIDTH/DEPTH	69 2.783Wd	7 m	72	0	31	10.11 10.11	181 276	0.286 0.328	251	1266 (Pipe	108 flow=	143 Sum	36.000 upstr	0.25 atten	450(2 flows)	0.90 (0.90)	0.60		Qg 0.072 Qo 0.143 Do 450 Angle 90 Chart 47 S/Do 2.5 chartdeg Du/Do 0.83 K0 2.07 K0.5 2.30 Qu/Qo 0.50 Cg 1.00 K 2.30 S/Do 2.0 K0 2.48 K0.5 2.40 K 2.40 S/Do 1.5 K0 2.70 K0.5 2.70 K 2.70	0.041	2.04	0.084		Interp	2.41 val for S/Do	0.099 1.97 Kw	0.25 2.41	0.091			5.390 5.300	5.729 5.638	5.813		5.828	6.070	21
10 100	12	12 to 31	12			10.00 10.00	182 278		0.87 1.00	0.153 0.153	0.133 0.153	0.133 0.153	67 118	67 FLOW	0.20 WIDTH/DEPTH	69 2.697Wd	7 m	67	0	13	10.00 10.00	182 278	0.133 0.153	118			67 (Pipe	6.326 flow=	0.63 Grate	375(2 flow)	0.61 (1.26)	0.11		Qg 0.067 Qo 0.067 Do 375 CHRT 32: Vo2/2gDo 0.05 H/Do 0.73 Kg side flow 6.63 end flow 4.96	0.019	6.63	0.126			6.63	0.126	0.15	0.009			5.375 5.335	5.647 5.638	5.773		5.773	6.000	12
10 100	31	31 to 41	11;21;12;31			10.00 10.00	182 278		0.87 1.00	0.153 0.153	0.133 0.153	0.133 0.153	67 118	67 FLOW	0.20 WIDTH/DEPTH	69 2.697Wd	7 m	67	0	41	10.71 10.71	178 270	0.552 0.634	476	1266 (Pipe	204 flow=	272 Sum	36.000 upstr	0.22 atten	600(2 flows)	0.93 (1.03)	0.60		Qg 0.066 Qo 0.272 Do 600 Routine 2.2 CHART 48 Du/Do 0.75 Qu/Qo 0.52 K 1.03 d/Do 2.0 chrt Qg/Qo 0.24 Kg 0.27 d/Do 1.5 chrt Qg/Qo 0.24 Kg 0.33 d/Do 1.44 Interp value Kg 0.33 Ku=Kw= 1.36 Combined pipes in line case Join Pipes:	0.044	1.36	0.060		12 and 21 Vel1 0.886 Vel2 0.593 Eq Dia 575 Angle 151 Flow 0.206 CHART 33 Angle 0 S/Do 2.5 Du/Do 0.96 Qg/Qo 0.24 K 0.90 S/Do 1.52 con 0.26 Ku 1.16 Kw 1.16 Interpolated Ku= 1.36 Kw= 1.36		1.36	0.060	0.18	0.065			5.310 5.230	5.578 5.513	5.638		5.638	6.000	31
10 100	13	13 to 41	13			10.00 10.00	182 278		0.87 1.00	0.153 0.153	0.133 0.153	0.133 0.153	67 118	67 FLOW	0.20 WIDTH/DEPTH	69 2.697Wd	7 m	67	0	14	10.00 10.00	182 278	0.133 0.153	118			67 (Pipe	6.326 flow=	0.63 Grate	375(2 flow)	0.61 (1.26)	0.11		Qg 0.067 Qo 0.067 Do 375 CHRT 32: Vo2/2gDo 0.05 H/Do 0.58 Kg side flow 7.15 end flow 5.33	0.019	7.15	0.136			7.15	0.136	0.15	0.009			5.305 5.265	5.522 5.513	5.658		5.658	5.930	13
10 100	41	41 to 51	11;21;12;31;1 3;41			10.00 10.00	182 278		0.87 1.00	0.153 0.153	0.133 0.153	0.133 0.153	67 118	67 FLOW	0.20 WIDTH/DEPTH	69 2.697Wd	7 m	67	0	51	11.31 11.31	174 265	0.818 0.940	692	1266 (Pipe	298 flow=	394 Sum	27.000 upstr	0.22 atten	750(2 flows)	0.86 (1.20)	0.45		Qg 0.064 Qo 0.394 Do 750 Routine 2.2 CHART 48 Du/Do 0.80 Qu/Qo 0.67 K 0.59 d/Do 2.0 chrt Qg/Qo 0.16 Kg 0.17 d/Do 1.5 chrt Qg/Qo 0.16 Kg 0.19 d/Do 1.33 Interp value Kg 0.20 Ku=Kw= 0.79 Combined pipes in line case Join Pipes:	0.038	0.79	0.030		13 and 31 Vel1 0.940 Vel2 0.580 Eq Dia 694 Angle 162 Flow 0.330 CHART 33 Angle 0 S/Do 2.5 Du/Do 0.93 Qg/Qo 0.16 K 0.61 S/Do 1.37 con 0.21 Ku 0.82 Kw 0.82 Interpolated Ku= 0.79 Kw= 0.79		0.79	0.030	0.12	0.031			5.232 5.172	5.483 5.452	5.513		5.513	5.930	41
10 100	14	14 to 51	14			10.00 10.00	182 278		0.87 1.00	0.115 0.115	0.100 0.115	0.100 0.115	51 89	51 FLOW	0.20 WIDTH/DEPTH	69 2.394Wd	7 m	51	0	15	10.00 10.00	182 278	0.100 0.115	89			51 (Pipe	6.326 flow=	0.63 Grate	375(2 flow)	0.46 (1.26)	0.11		Qg 0.051 Qo 0.051 Do 375 CHRT 32: Vo2/2gDo 0.03 H/Do 0.57 Kg side flow 7.85 end flow 5.64	0.011	7.85	0.085			7.85	0.085	0.08	0.005			5.245 5.205	5.457 5.452	5.542		5.542	5.870	14
10 100	51	51 to 61	11;21;12;31;1 3;41;14;51			10.00 10.00	182 278		0.87 1.00	0.115 0.115	0.100 0.115	0.100 0.115	51 89	51 FLOW	0.20 WIDTH/DEPTH	69 2.394Wd	7 m	51	0	61	11.76 11.76	171 260	1.018 1.170	845	1266 (Pipe	362 flow=	483 Sum	27.000 upstr	0.22 atten	750(2 flows)	1.06 (1.20)	0.42		Qg 0.048 Qo 0.483 Do 750 Routine 2.2 CHART 48 Du/Do 1.00 Qu/Qo 0.80 K 0.78 d/Do 2.0 chrt Qg/Qo 0.10 Kg 0.10 d/Do 1.5 chrt Qg/Qo 0.10 Kg 0.09 d/Do 1.30 Interp value Kg 0.09 Ku=Kw= 0.86 Combined pipes in line case Join Pipes:	0.057	0.86	0.049		14 and 41 Vel1 0.876 Vel2 0.434 Eq Dia 818 Angle 170 Flow 0.435 CHART 33 Angle 0 S/Do 2.5 Du/Do 1.09 Qg/Qo 0.10 K 0.51 S/Do 1.35 con 0.13 Ku 0.64 Kw 0.64 Interpolated Ku= 0.86 Kw= 0.86		0.86	0.049	0.17	0.047			5.172 5.112	5.403 5.356	5.452		5.452	5.870	51
10 100	15	15 to 61	15			10.00 10.00	182 278		0.87 1.00	0.115 0.115	0.100 0.115	0.100 0.115	51 89	51 FLOW	0.20 WIDTH/DEPTH	69 2.394Wd	7 m	51	0	16	10.00 10.00	182 278	0.100 0.115	89			51 (Pipe	6.326 flow=	0.63 Grate	375(2 flow)	0.46 (1.26)	0.11		Qg 0.051 Qo 0.051 Do 375 CHRT 32: Vo2/2gDo 0.03 H/Do 0.44 Kg side flow 8.31 end flow 5.97	0.011	8.31	0.090			8.31	0.090	0.08	0.005			5.195 5.155	5.361 5.356	5.451		5.451	5.820	15
10 100	61	61 to 71	11;21;12;31;1 3;41;14;51;15 ;61			10.00 10.00	182 278		0.87 1.00	0.115 0.115	0.100 0.115	0.100 0.115	51 89	51 FLOW	0.20 WIDTH/DEPTH	69 2.394Wd	7 m	51	0	71	12.18 12.18	169 257	1.218 1.400	999	1266 (Pipe	427 flow=	572 Sum	36.000 upstr	0.22 atten	825(2 flows)	1.04 (1.28)	0.58		Qg 0.047 Qo 0.572 Do 825 Routine 2.2 CHART 48 Du/Do 0.91 Qu/Qo 0.83 K 0.38 d/Do 2.0 chrt Qg/Qo 0.08 Kg 0.07 d/Do 1.5 chrt Qg/Qo 0.08 Kg 0.06 d/Do 1.29 Interp value Kg 0.06 Ku=Kw= 0.44 Combined pipes in line case Join Pipes:	0.055	0.44	0.024		15 and 51 Vel1 1.080 Vel2 0.429 Eq Dia 808 Angle 171 Flow 0.525 CHART 33 Angle 0 S/Do 2.5 Du/Do 0.98 Qg/Qo 0.08 K 0.44 S/Do 1.33 con 0.11 Ku 0.55 Kw 0.55 Interpolated Ku= 0.44 Kw= 0.44		0.44	0.024	0.15	0.053			5.088 5.008	5.332 5.279	5.356		5.356	5.820	61
10 100	16	16 to 71	16			10.00 10.00	182 278		0.87 1.00	0.153 0.153	0.133 0.153	0.133 0.153	67 118	67 FLOW	0.20 WIDTH/DEPTH	69 2.697Wd	7 m	67	0	17	10.00 10.00	182 278	0.133 0.153	118			67 (Pipe	6.326 flow=	0.63 Grate	375(2 flow)	0.61 (1.26)	0.11		Qg 0.067 Qo 0.067 Do 375 CHRT 32: Vo2/2gDo 0.05 H/Do 0.44 Kg side flow 7.66 end flow 5.70	0.019	7.66	0.146			7.66	0.146	0.15	0.009			5.125 5.085	5.288 5.279	5.434		5.434	5.750	16
10 100	71	71 to 81	11;21;12;31;1 3;41;14;51;15 ;61;16;71			10.00 10.00	182 278		0.87 1.00	0.153 0.153	0.133 0.153	0.133 0.153	67 118	67 FLOW	0.20 WIDTH/DEPTH	69 2.697Wd	7 m	67	0	81	12.76 12.76	166 252	1.484 1.706	1194	1266 (Pipe	510 flow=	684 Sum	36.000 upstr	0.22 atten	825(2 flows)	1.24 (1.28)	0.48		Qg 0.061 Qo 0.684 Do 825 Routine 2.2 CHART 48 Du/Do 1.00 Qu/Qo 0.82 K 0.72 d/Do 2.0 chrt Qg/Qo 0.09 Kg 0.09 d/Do 1.5 chrt Qg/Qo 0.09 Kg 0.08 d/Do 1.25 Interp value Kg 0.08 Ku=Kw= 0.80 Combined pipes in line case Join Pipes:	0.078	0.80	0.063		16 and 61 Vel1 1.051 Vel2 0.553 Eq Dia 889 Angle 171 Flow 0.623 CHART 33 Angle 0 S/Do 2.5 Du/Do 1.08 Qg/Qo 0.09 K 0.48 S/Do 1.30 con 0.12 Ku 0.60 Kw 0.60 Interpolated Ku= 0.80 Kw= 0.80		0.80	0.063	0.21	0.075			5.008 4.928	5.216 5.141	5.279		5.279	5.750	71
10 100	17	17 to 81	17			10.00 10.00	182 278		0.87 1.00	0.153 0.153	0.133 0.153	0.133 0.153	67 118	67 FLOW	0.20 WIDTH/DEPTH	69 2.697Wd	7 m	67	0	18	10.00 10.00	182 278	0.133 0.153	118			67 (Pipe	6.326 flow=	0.63 Grate	375(2 flow)	0.61 (1.26)	0.11		Qg 0.067 Qo 0.067 Do 375 CHRT 32: Vo2/2gDo 0.05 H/Do 0.28 Kg side flow 8.21 end flow 6.09	0.019	8.21	0.156			8.21	0.156	0.15	0.009			5.045 5.005	5.150 5.141	5.306		5.306	5.670	17
10 100	81	81 to 91	11 to 71;17;8 1			10.00 10.00	182 278		0.87 1.00	0.153 0.153	0.133 0.153	0.133 0.153	67 118	67 FLOW	0.20 WIDTH/DEPTH	69 2.697Wd	7 m	67	0	91	13.24 13.24	163 248	1.750 2.012	1386	1266 (Pipe	594 flow=	792 Sum	36.000 upstr	0.22 atten	900(2 flows)	1.20 (1.36)	0.50		Qg 0.060 Qo 0.792 Do 900 Routine 2.2 CHART 48 Du/Do 0.92 Qu/Qo 0.85 K 0.36 d/Do 2.0 chrt Qg/Qo 0.08 Kg 0.07 d/Do 1.5 chrt Qg/Qo 0.08 Kg 0.06 d/Do 1.19 Interp value Kg 0.06 Ku=Kw= 0.42 Combined pipes in line case Join Pipes:	0.073	0.42	0.031		17 and 71 Vel1 1.257 Vel2 0.543 Eq Dia 881 Angle 172 Flow 0.732 CHART 33 Angle 0 S/Do 2.5 Du/Do 0.98 Qg/Qo 0.08 K 0.41 S/Do 1.23 con 0.11 Ku 0.52 Kw 0.52 Interpolated Ku= 0.42 Kw= 0.42		0.42	0.031	0.18	0.063			4.935 4.855	5.110 5.047	5.141		5.141	5.670	81

Q10 HD RES (1 IN 500 ROAD GRADE) DRAINAGE CALCS (SHT 2 OF 2)

LOCATION					TIME		SUB-CATCHMENT RUNOFF						INLET DESIGN						
						tc	I	C10	C	A	C×A	+CA	Q					Qg	Qb
DESIGN ARI	STRUCTURE No.	DRAIN SECTION	SUB-CATCHMENTS CONTRIBUTING	LAND USE	SLOPE OF CATCHMENT	SUB-CATCHMENT TIME OF CONC.	RAINFALL INTENSITY	10yr RUNOFF CO-EFFICIENT	CO-EFFICIENT OF RUNOFF	SUB-CATCHMENT AREA	EQUIVALENT AREA	SUM OF (C × A)	SUB-CATCHMENT DISCHARGE	FLOW IN K&C (INC. BYPASS)	ROAD GRADE AT INLET	MINOR FLOW ROAD CAPACITY	INLET TYPE	FLOW INTO INLET	BYPASS FLOW
yrs					%	min	mm/h			ha	ha	ha	l/s	l/s	%	l/s		l/s	l/s
10 100	18	18 to 91	18			10.00 10.00	182 278		0.87 1.00	0.153 0.153	0.133 0.153	0.133 0.153	67 118	67	0.20	69	7 FLOW WIDTH/DEPTH 2.697Wd m	67	0
10 100	91	91 to 101	11 to 71;17;8 1;18;91			10.00 10.00	182 278		0.87 1.00	0.153 0.153	0.133 0.153	0.133 0.153	67 118	67	0.20	69	7 FLOW WIDTH/DEPTH 2.697Wd m	67	0
10 100	19	19 to 101	19			10.00 10.00	182 278		0.87 1.00	0.153 0.153	0.133 0.153	0.133 0.153	67 118	67	0.20	69	7 FLOW WIDTH/DEPTH 2.697Wd m	67	0
10 100	101	101 to 111	11 to 71;17;8 1;18;91;19;10 1			10.00 10.00	182 278		0.87 1.00	0.153 0.153	0.133 0.153	0.133 0.153	67 118	67	0.20	69	7 FLOW WIDTH/DEPTH 2.697Wd m	67	0
10 100	110	110 to 111	110			10.00 10.00	182 278		0.87 1.00	0.153 0.153	0.133 0.153	0.133 0.153	67 118	67	0.20	69	7 FLOW WIDTH/DEPTH 2.697Wd m	67	0
10 100	111	111 to 121	11 to 71;17;8 1;18;91;19;10 1;110;111			10.00 10.00	182 278		0.87 1.00	0.153 0.153	0.133 0.153	0.133 0.153	67 118	67	0.20	69	7 FLOW WIDTH/DEPTH 2.697Wd m	67	0
10 100	112	112 to 121	112			10.00 10.00	182 278		0.87 1.00	0.153 0.153	0.133 0.153	0.133 0.153	67 118	67	0.20	69	7 FLOW WIDTH/DEPTH 2.697Wd m	67	0
10 100	121	121 to 131	11 to 111;112 ;121			10.00 10.00	182 278		0.87 1.00	0.153 0.153	0.133 0.153	0.133 0.153	67 118	67	0.20	69	7 FLOW WIDTH/DEPTH 2.697Wd m	67	0
10 100	113	113 to 131	113			10.00 10.00	182 278		0.87 1.00	0.153 0.153	0.133 0.153	0.133 0.153	67 118	67	0.20	69	7 FLOW WIDTH/DEPTH 2.697Wd m	67	0
10 100	131	131 to 141	11 to 111;112 ;121;113;131			10.00 10.00	182 278		0.87 1.00	0.153 0.153	0.133 0.153	0.133 0.153	67 118	67	0.20	69	7 FLOW WIDTH/DEPTH 2.697Wd m	67	0
10 100	114	114 to 141	114			10.00 10.00	182 278		0.87 1.00	0.153 0.153	0.133 0.153	0.133 0.153	67 118	67	0.20	69	7 FLOW WIDTH/DEPTH 2.697Wd m	67	0
10 100	141	141 to 151	11 to 111;112 ;121;113;131; 114;141			10.00 10.00	182 278		0.87 1.00	0.153 0.153	0.133 0.153	0.133 0.153	67 118	67	0.20	69	7 FLOW WIDTH/DEPTH 2.697Wd m	67	0
10 100	115	115 to 151	115			10.00 10.00	182 278		0.87 1.00	0.153 0.153	0.133 0.153	0.133 0.153	67 118	67	0.20	69	7 FLOW WIDTH/DEPTH 2.697Wd m	67	0
10 100	151	151 to 161	11 to 141;115 ;151			10.00 10.00	182 278		0.87 1.00	0.153 0.153	0.133 0.153	0.133 0.153	67 118	67	0.20	69	7 FLOW WIDTH/DEPTH 2.697Wd m	67	0

DRAIN DESIGN														HEADLOSSES									PART FULL	DESIGN LEVELS						
	tc	I	+CA	Qt	Qm	Qs	Qp	L	S		V	T			V2/2g	Ku	hu	Kl	hl	Kw	hw	Sf	hf		Vp					
DESIGN ARI	CRITICAL TIME OF CONC.	RAINFALL INTENSITY	TOTAL (C × A)	MAJOR TOTAL FLOW	MAJOR SURFACE FLOW CAPACITY	MAJOR SURFACE FLOW	PIPE FLOW	REACH LENGTH	PIPE GRADE	PIPE / BOX DIMENSIONS (CLASS)	FLOW VELOCITY FULL (PIPE GRADE VELOCITY)	TIME OF FLOW IN REACH	STRUCTURE CHART No.	STRUCTURE RATIOS FOR 'K' VALUE CALCULATIONS	VELOCITY HEAD	U/S HEADLOSS COEFFICIENT	U/S PIPE STRUCT. HEADLOSS	LAT. HEADLOSS CO-EFFICIENT	LAT. PIPE STRUCT. HEADLOSS	W.S.E CO-EFFICIENT	CHANGE IN W.S.E	PIPE FRICTION SLOPE	PIPE FRICTION HEADLOSS (L × Sf)	DEPTH	VELOCITY	OBVERT LEVELS	DRAIN SECTION H.G.L	UPSTREAM H.G.L	LAT. H.G.L	W.S.E.	SURFACE OR K&C INVERT LEVEL	STRUCTURE No.
yrs	min	mm/h	ha	l/s	l/s	l/s	l/s	m	%	mm	m/s	min			m		m		m		m	%	m	m	m/s	m	m	m	m	m	m	
10 100	10.00 10.00	182 278	0.133 0.153	118		(Pipe	67 flow=	6.326 Grate	0.63 flow)	375(2)	0.61 (1.26)	0.11		Qg 0.067 Qo 0.067 Do 375 CHRT 32: Vo2/2gDo 0.05 H/Do 0.22 Kg side flow 8.44 end flow 6.24	0.019	8.44	0.160			8.44	0.160	0.15	0.009			4.975 4.935	5.056 5.047	5.216		5.216	5.600	18
10 100	13.74 13.74	161 244	2.016 2.318	1571	1266	671 (Pipe	901 flow=	36.000 Sum	0.22 upstr	1050(2) atten flows)	1.01 (1.50)	0.59		Qg 0.059 Qo 0.901 Do 1050 Routine 2.2 CHART 48 Du/Do 0.86 Qu/Qo 0.87 K 0.02 d/Do 2.0 chrt Qg/Qo 0.07 Kg 0.05 d/Do 1.5 chrt Qg/Qo 0.07 Kg 0.05 d/Do 1.10 Interp value Kg 0.04 Ku=Kw= 0.06 Combined pipes in line case Join Pipes:	0.052	0.06	0.003	18 and 81 Vel1 1.229 Vel2 0.537 Eq Dia 952 Angle 173 Flow 0.841 CHART 33 Angle 0 S/Do 2.5 Du/Do 0.91 Qg/Qo 0.07 K 0.19 S/Do 1.12 cor 0.11 Ku 0.30 Kw 0.30 Interpolated Ku= 0.06 Kw= 0.06		0.06	0.003	0.10	0.036			4.936 4.856	5.044 5.008	5.047		5.047	5.600	91
10 100	10.00 10.00	182 278	0.133 0.153	118		(Pipe	67 flow=	6.326 Grate	0.63 flow)	375(2)	0.61 (1.26)	0.11		Qg 0.067 Qo 0.067 Do 375 CHRT 32: Vo2/2gDo 0.05 H/Do 0.30 Kg side flow 8.15 end flow 6.04	0.019	8.15	0.155			8.15	0.155	0.15	0.009			4.905 4.865	5.017 5.008	5.172		5.172	5.530	19
10 100	14.33 14.33	158 240	2.282 2.624	1749	1266	749 (Pipe	1000 flow=	36.000 Sum	0.22 upstr	1050(2) atten flows)	1.12 (1.50)	0.54		Qg 0.058 Qo 1.000 Do 1050 Routine 2.2 CHART 48 Du/Do 1.00 Qu/Qo 0.88 K 0.55 d/Do 2.0 chrt Qg/Qo 0.06 Kg 0.06 d/Do 1.5 chrt Qg/Qo 0.06 Kg 0.05 d/Do 1.11 Interp value Kg 0.05 Ku=Kw= 0.60 Combined pipes in line case Join Pipes:	0.064	0.60	0.038	19 and 91 Vel1 1.021 Vel2 0.527 Eq Dia 1100 Angle 174 Flow 0.942 CHART 33 Angle 0 S/Do 2.5 Du/Do 1.05 Qg/Qo 0.06 K 0.39 S/Do 1.14 cor 0.09 Ku 0.48 Kw 0.48 Interpolated Ku= 0.60 Kw= 0.60		0.60	0.038	0.12	0.045			4.856 4.776	4.970 4.925	5.008		5.008	5.530	101
10 100	10.00 10.00	182 278	0.133 0.153	118		(Pipe	67 flow=	6.326 Grate	0.63 flow)	375(2)	0.61 (1.26)	0.11		Qg 0.067 Qo 0.067 Do 375 CHRT 32: Vo2/2gDo 0.05 H/Do 0.26 Kg side flow 8.27 end flow 6.12	0.019	8.27	0.157			8.27	0.157	0.15	0.009			4.835 4.795	4.934 4.925	5.091		5.091	5.460	110
10 100	14.87 14.87	156 237	2.548 2.930	1929	1266	827 (Pipe	1102 flow=	36.000 Sum	0.22 upstr	1050(2) atten flows)	1.24 (1.50)	0.48		Qg 0.057 Qo 1.102 Do 1050 Routine 2.1 CHART 48 Du/Do 1.00 Qu/Qo 0.90 K 0.51 d/Do 2.0 chrt Qg/Qo 0.05 Kg 0.05 d/Do 1.5 chrt Qg/Qo 0.05 Kg 0.05 d/Do 1.10 Interp value Kg 0.05 Ku=Kw= 0.56 Combined pipes in line case Join Pipes:	0.078	0.56	0.044	101 and 110 Vel1 1.140 Vel2 0.520 Eq Dia 1096 Angle 175 Flow 1.045 CHART 33 Angle 0 S/Do 2.5 Du/Do 1.04 Qg/Qo 0.05 K 0.38 S/Do 1.13 cor 0.08 Ku 0.46 Kw 0.46 Interpolated Ku= 0.56 Kw= 0.56		0.56	0.044	0.15	0.054			4.776 4.696	4.881 4.827	4.925		4.925	5.460	111
10 100	10.00 10.00	182 278	0.133 0.153	118		(Pipe	67 flow=	6.326 Grate	0.63 flow)	375(2)	0.61 (1.26)	0.11		Qg 0.067 Qo 0.067 Do 375 CHRT 32: Vo2/2gDo 0.05 H/Do 0.19 Kg side flow 8.53 end flow 6.30	0.019	8.53	0.162			8.53	0.162	0.15	0.009			4.765 4.725	4.836 4.827	4.998		4.998	5.390	112
10 100	15.35 15.35	153 233	2.814 3.236	2094	1266	901 (Pipe	1194 flow=	36.000 Sum	0.19 upstr	1200(2) atten flows)	1.02 (1.54)	0.59		Qg 0.056 Qo 1.194 Do 1200 Flow 112 made eqv grate flow CHART 33 Angle 0 S/Do 2.5	0.053	0.36	0.019	Du/Do 0.88 Qg/Qo 0.09 K 0.20 S/Do 1.11 cor 0.16 Ku 0.36 Kw 0.36 K vals above for stepped pipes as grate flow		0.36	0.019	0.09	0.031			4.699 4.629	4.808 4.777	4.827		4.827	5.390	121
10 100	10.00 10.00	182 278	0.133 0.153	118		(Pipe	67 flow=	6.326 Grate	0.63 flow)	375(2)	0.61 (1.26)	0.11		Qg 0.067 Qo 0.067 Do 375 CHRT 32: Vo2/2gDo 0.05 H/Do 0.27 Kg side flow 8.25 end flow 6.11	0.019	8.25	0.157			8.25	0.157	0.15	0.009			4.685 4.645	4.786 4.777	4.943		4.943	5.310	113
10 100	15.94 15.94	151 230	3.080 3.542	2263	1266	974 (Pipe	1289 flow=	36.000 Sum	0.19 upstr	1200(2) atten flows)	1.10 (1.54)	0.55		Qg 0.056 Qo 1.289 Do 1200 Flow 113 made eqv grate flow CHART 33 Angle 0 S/Do 2.5	0.062	0.61	0.038	Du/Do 1.00 Qg/Qo 0.09 K 0.47 S/Do 1.12 cor 0.14 Ku 0.61 Kw 0.61 K vals above for stepped pipes as grate flow		0.61	0.038	0.10	0.036			4.629 4.559	4.739 4.703	4.777		4.777	5.310	131
10 100	10.00 10.00	182 278	0.133 0.153	118		(Pipe	67 flow=	6.326 Grate	0.63 flow)	375(2)	0.61 (1.26)	0.11		Qg 0.067 Qo 0.067 Do 375 CHRT 32: Vo2/2gDo 0.05 H/Do 0.26 Kg side flow 8.29 end flow 6.14	0.019	8.29	0.157			8.29	0.157	0.15	0.009			4.615 4.575	4.712 4.703	4.869		4.869	5.240	114
10 100	16.49 16.49	149 226	3.346 3.848	2416	1266	1034 (Pipe	1382 flow=	36.000 Sum	0.19 upstr	1200(2) atten flows)	1.18 (1.54)	0.51		Qg 0.055 Qo 1.382 Do 1200 Flow 114 made eqv grate flow CHART 33 Angle 0 S/Do 2.5	0.071	0.58	0.041	Du/Do 1.00 Qg/Qo 0.08 K 0.45 S/Do 1.12 cor 0.13 Ku 0.58 Kw 0.58 K vals above for stepped pipes as grate flow		0.58	0.041	0.12	0.042			4.559 4.489	4.662 4.620	4.703		4.703	5.240	141
10 100	10.00 10.00	182 278	0.133 0.153	118		(Pipe	67 flow=	6.326 Grate	0.63 flow)	375(2)	0.61 (1.26)	0.11		Qg 0.067 Qo 0.067 Do 375 CHRT 32: Vo2/2gDo 0.05 H/Do 0.22 Kg side flow 8.41 end flow 6.22	0.019	8.41	0.160			8.41	0.160	0.15	0.009			4.545 4.505	4.629 4.620	4.789		4.789	5.170	115
10 100	17.00 17.00	147 223	3.612 4.154	2573	1266	1102 (Pipe	1472 flow=	9.425 Sum	0.21 upstr	1350(2) atten flows)	1.00 (1.74)	0.16		Qg 0.054 Qo 1.472 Do 1350 Flow 115 made eqv grate flow CHART 33 Angle 0 S/Do 2.5	0.051	0.27	0.013	Du/Do 0.89 Qg/Qo 0.07 K 0.15 S/Do 1.09 cor 0.12 Ku 0.27 Kw 0.27 K vals above for stepped pipes as grate flow		0.27	0.013	0.07	0.007			4.492 4.472	4.607 4.600	4.620		4.620	5.170	151

Appendix E

Simplified Unit Hydrographs for Time of Submergence calculations

Case Study 1 (1:500, low density)
Time of submergence in street Q5 vs Q2

T_c (mins)	Flow		
	Q_{100}	Q_5	Q_2
0	0	0	0
15	0.598	0.233	0.194
25	0	0	0

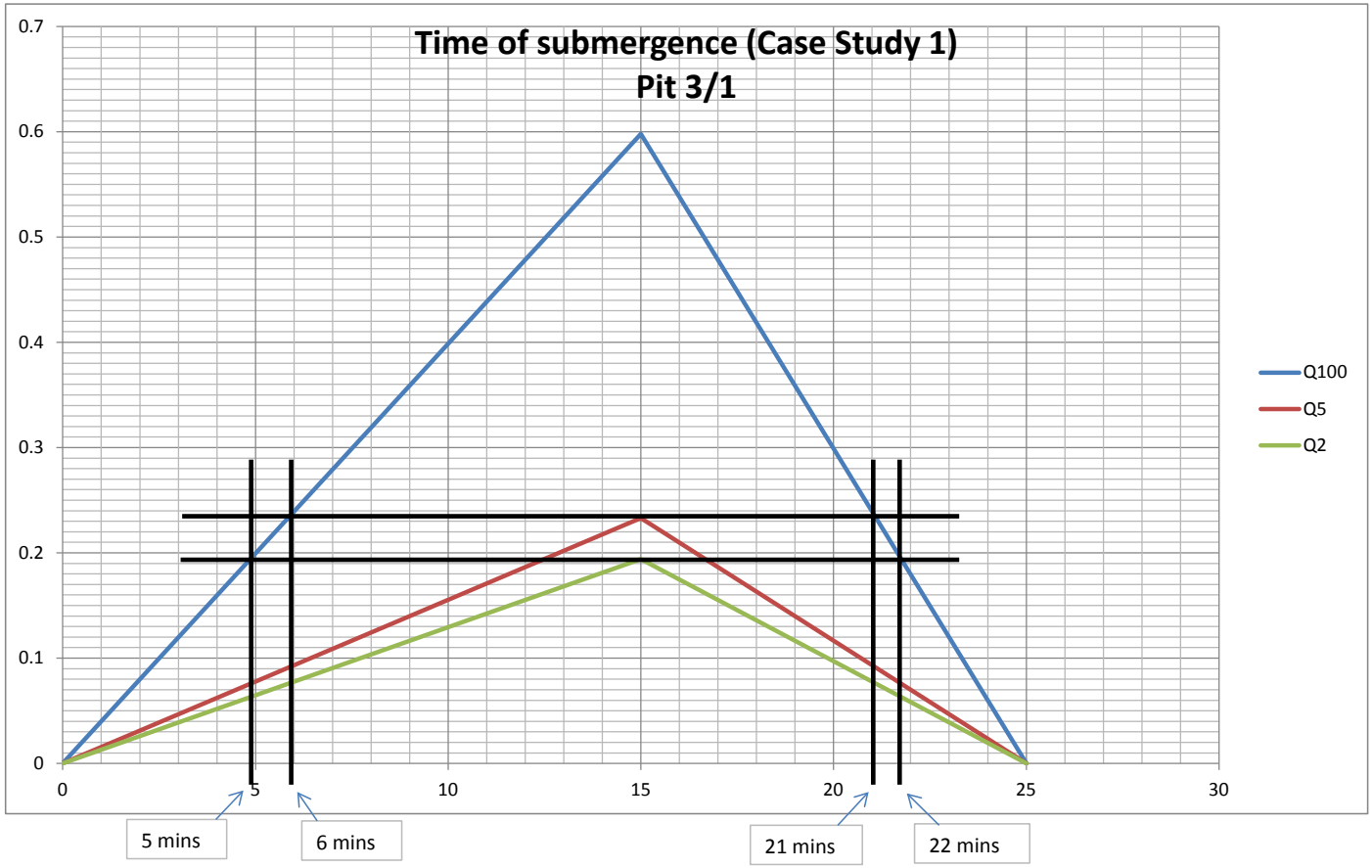

Q5 time (6 mins to 21 mins) = 15 mins submergence for Q100
Q2 time (5 mins to 22 mins) = 17 mins submergence for Q100

Case Study 1 (1:500, low density)
Time of submergence in street Q5 vs Q2

T_c (mins)	Flow		
	Q_{100}	Q_5	Q_2
0	0	0	0
15	2.3	0.892	0.797
25	0	0	0

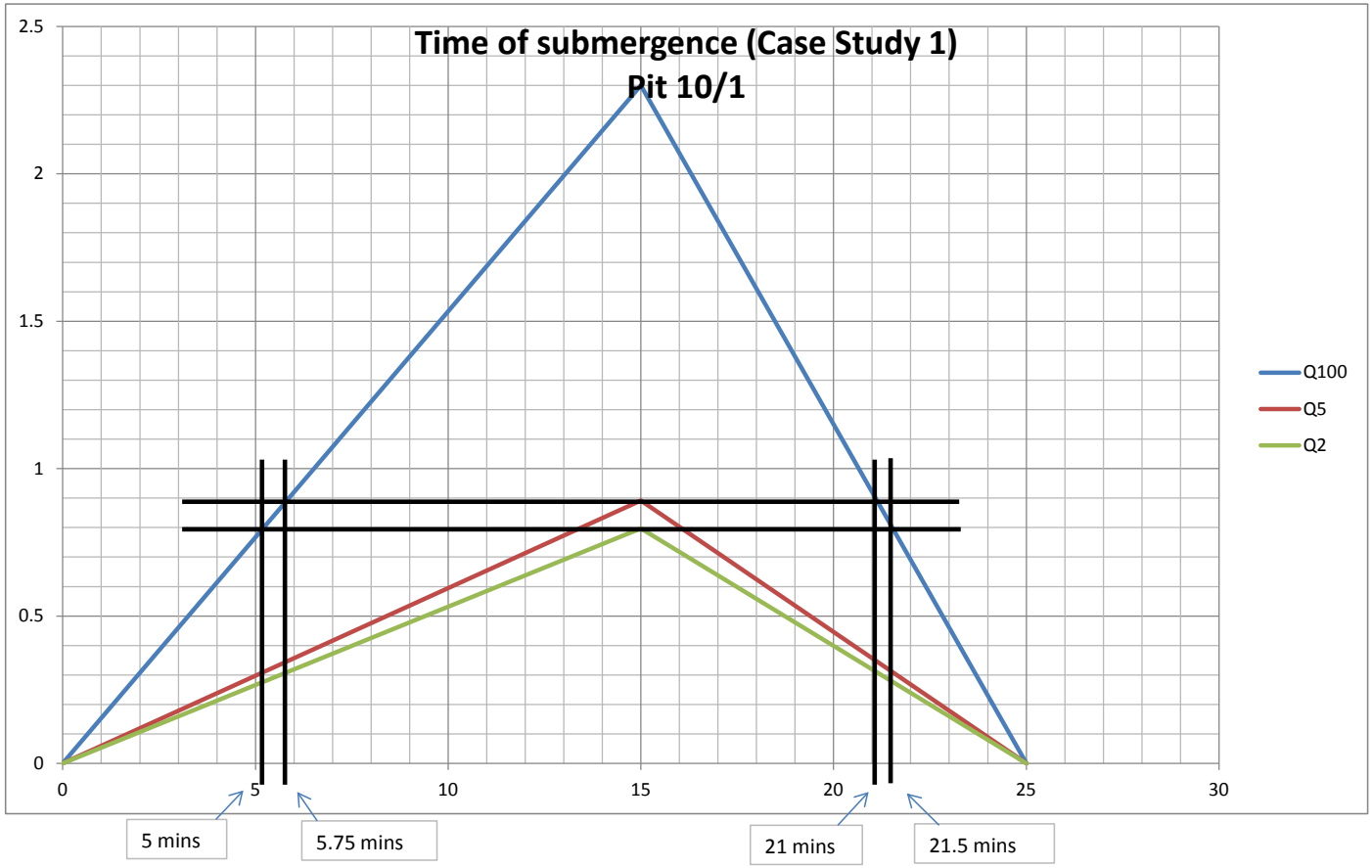

Q5 time (5.75 mins to 21 mins) = 15.25 mins submergence for Q100
Q2 time (5 mins to 21.5 mins) = 16.5 mins submergence for Q100

Case Study 2 (1:50, low density)
Time of submergence in street Q5 vs Q2

T_c (mins)	Flow		
	Q_{100}	Q_5	Q_2
0	0	0	0
15	1.254	0.495	0.376
25	0	0	0

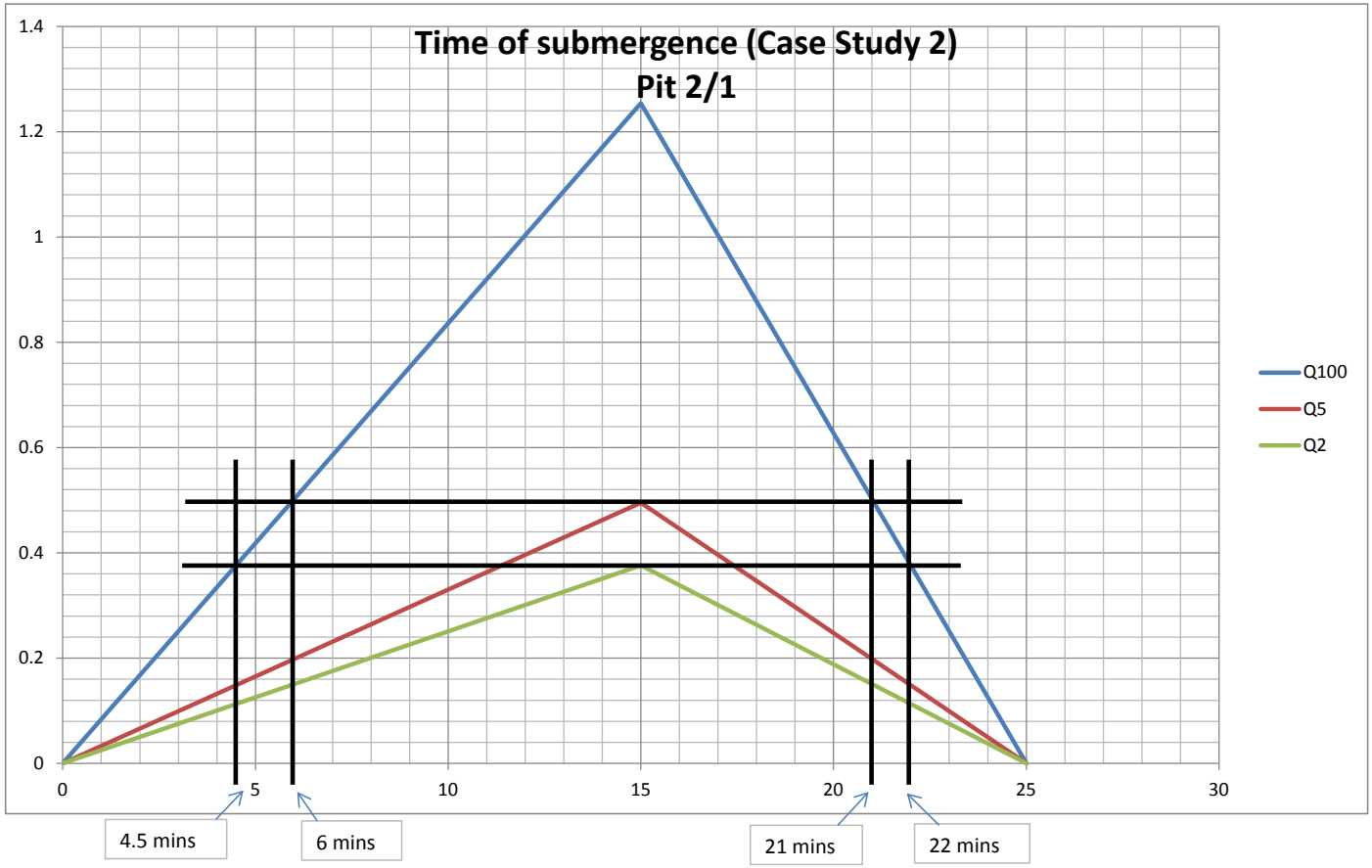

Q5 time (6 mins to 21 mins) = 15 mins submergence for Q100
Q2 time (4.5 mins to 22 mins) = 17.5 mins submergence for Q100

Case Study 2 (1:50, low density)
Time of submergence in street Q5 vs Q2

T_c (mins)	Flow		
	Q_{100}	Q_5	Q_2
0	0	0	0
15	2.655	1.16	0.92
25	0	0	0

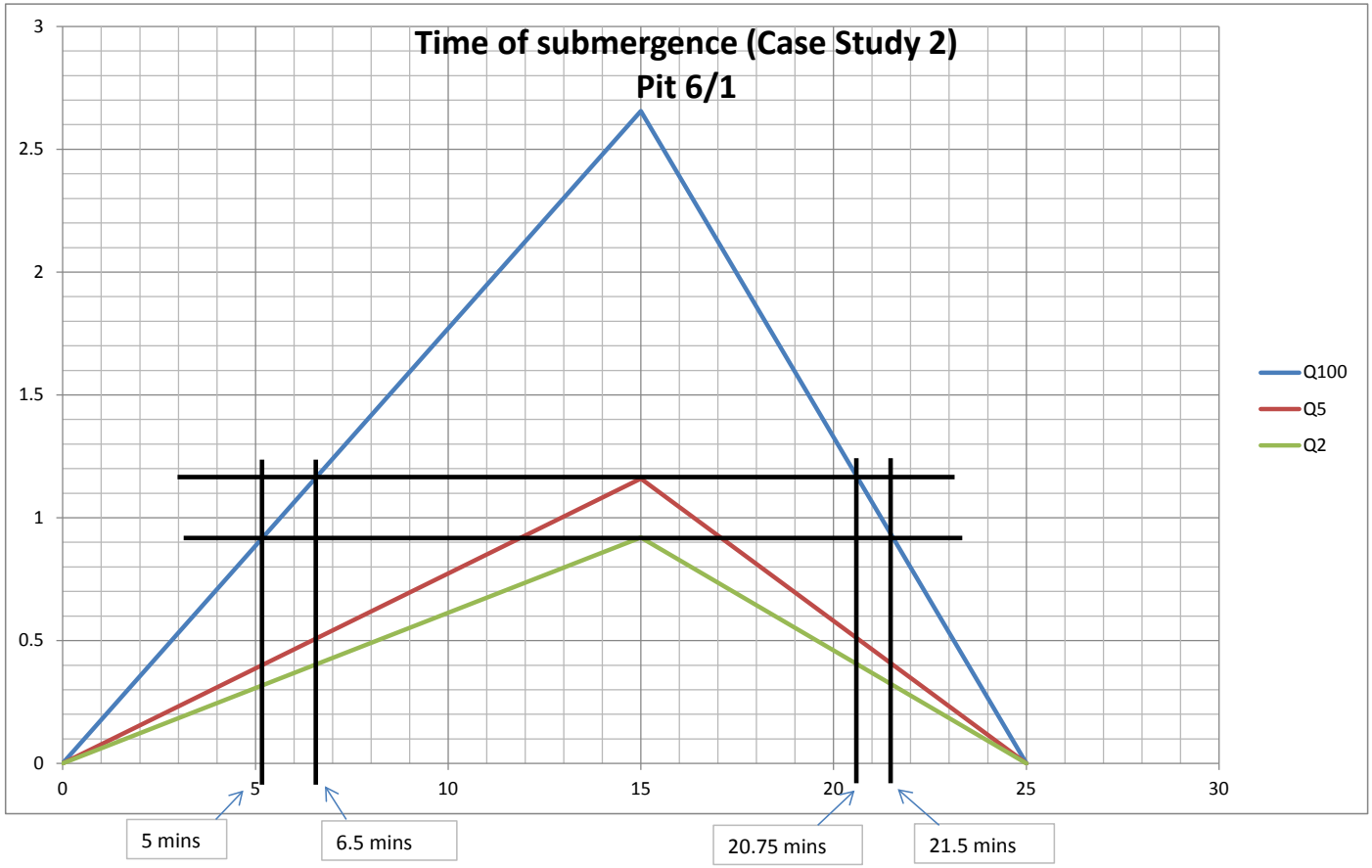

Q5 time (6.5 mins to 20.75 mins) = 14.25 mins submergence for Q100
Q2 time (5 mins to 21.5 mins) = 16.5 mins submergence for Q100