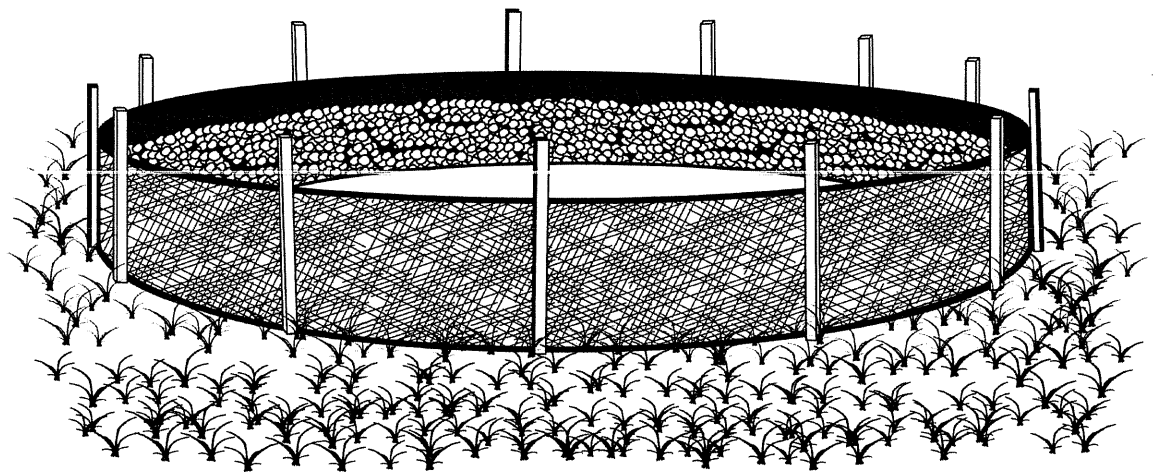

(a) Typical layout of a filter pond

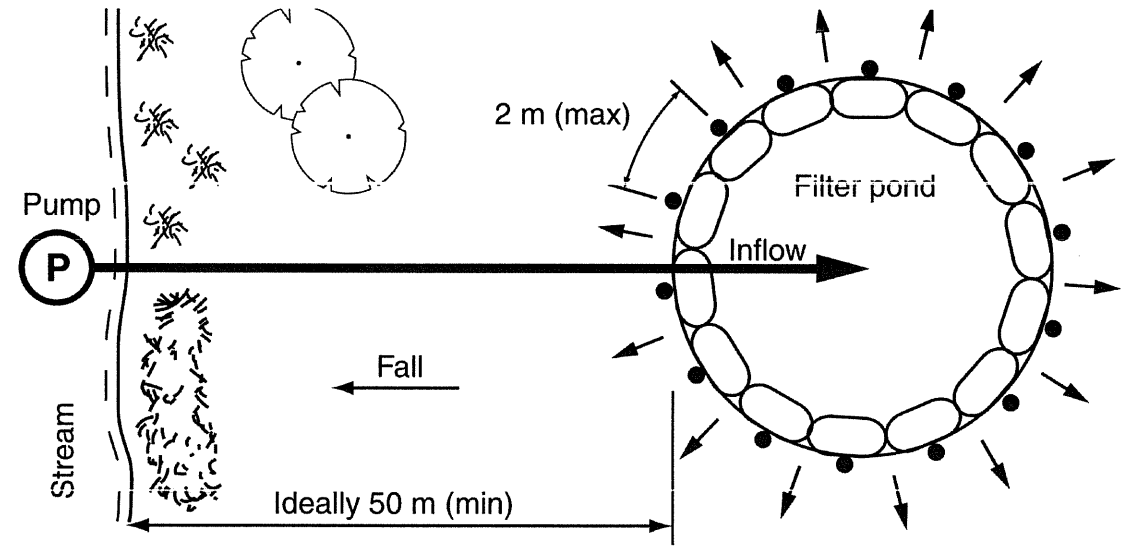

(b) Ideal placement of filter pond adjacent a watercourse

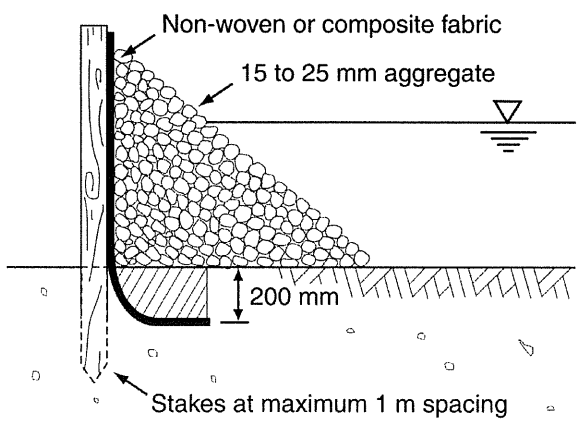

(c) Fabric and aggregate sidewall arrangement

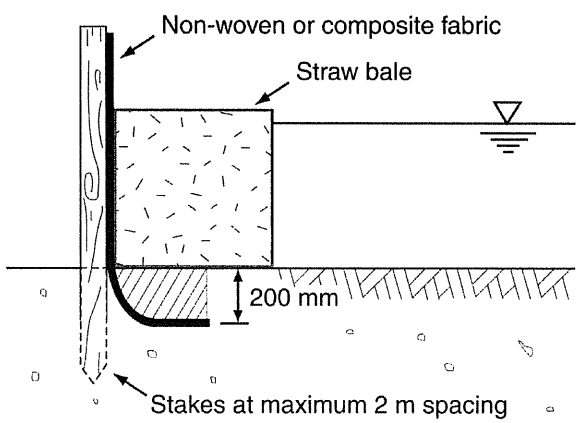

(d) Fabric and straw bale sidewall arrangement

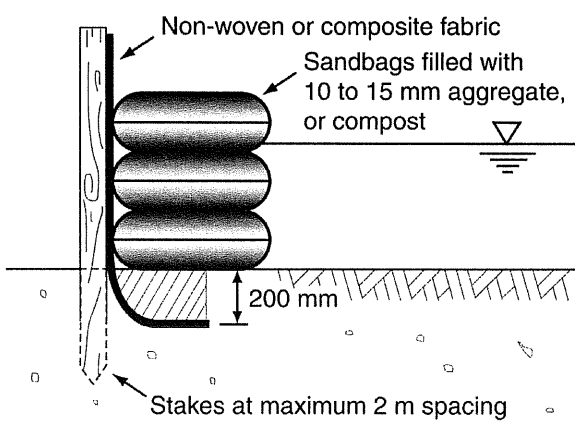

(e) Fabric and sandbag sidewall arrangement

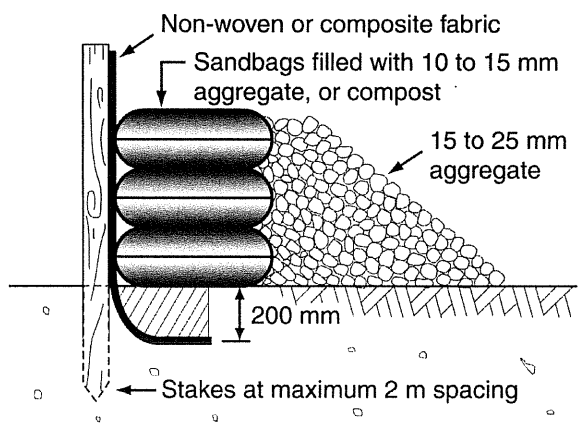

(f) Fabric, sandbag and aggregate sidewall

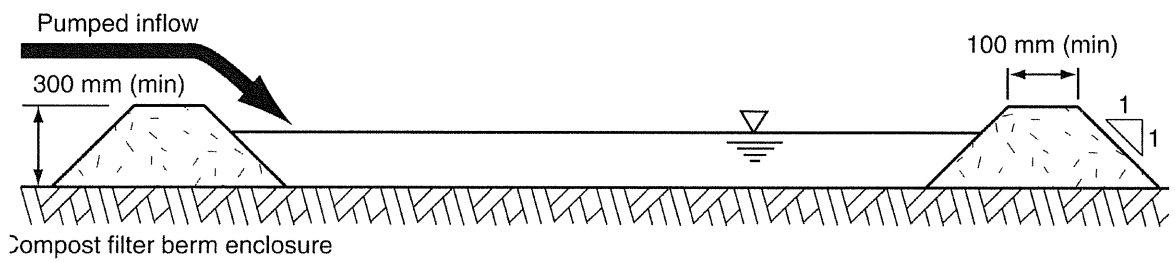

(g) Typical arrangement of a compost berm filter pond

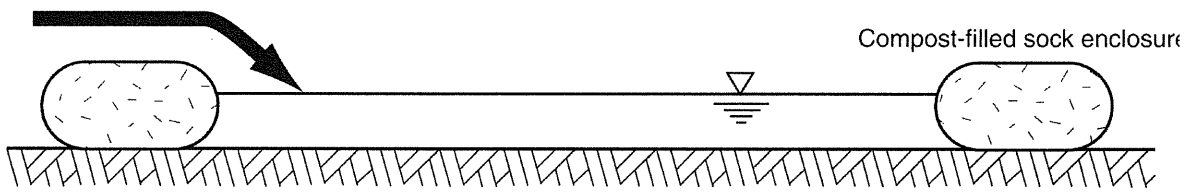

(h) Typical arrangement of a compost sock filter pond

NO.	DATE	DESCRIPTION	APPVD
A	18/11/11	ISSUE FOR CONSTRUCTION	-

AMENDMENTS AND REVISIONS

FILE NAME DESIGN\DOCUMENTS\SESC STD DRAWINGS\...

SURVEY -

SURVEY FILE No -

LEVEL DATUM AHD

MERIDIAN MGA 55

DRAWN	SIGNED	DATE
PDG	PDG	12/12/11
DESIGNED PDG	SIGNED PDG	DATE 12/12/11
CHECKED	SIGNED	DATE

MANAGER TECHNICAL SERVICES
G. HAWES RPEQ 5693 — DATE 12/12/11

DIRECTOR ENGINEERING SERVICES
STUART HOLLEY RPEQ 8940
DATE 20.12.11

Mackay REGIONAL COUNCIL

FILTER PONDS

SHEET 1 OF 1

WORKS JOB No. -

DRAWING No. A3-6834

AMEND. A