PARTS LIST			
ITEM	QTY	DESCRIPTION	DRAWING No.
4.1.1	1	CONCRETE OUTER	19010-004-011
4.1.2	1	CONCRETE SHELF	19010-004-011
4.1.3	4	SDSS2507 6 PL (PRESSED)	19010-004-011
4.1.4	4	SDSS2507 6 PL WASHER	19010-004-011
V001	4	SDSS2507 M16 ROD x 165 LG	VENDOR
V002	8	SDSS2507 M16 HEX NUT	VENDOR
V003	4	SDSS2507 WASHER - 16mm FLAT	VENDOR

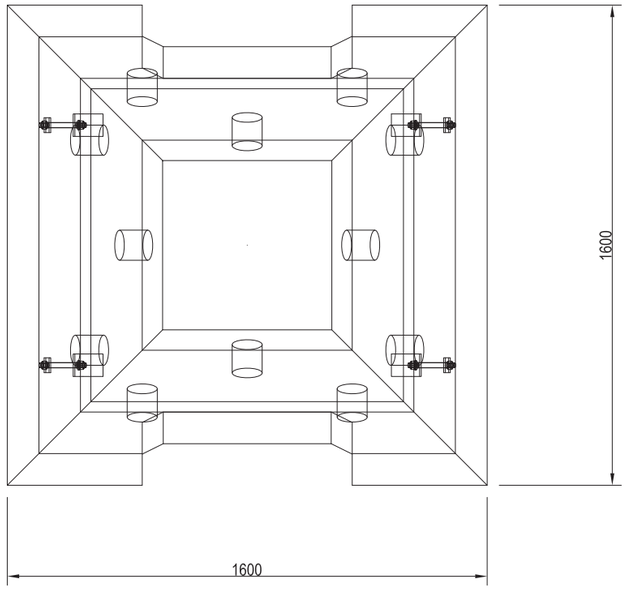

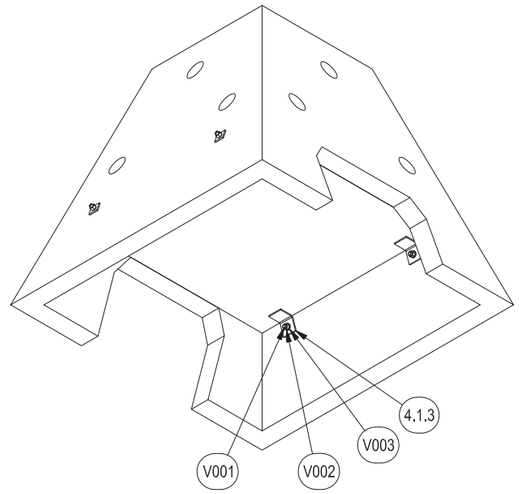

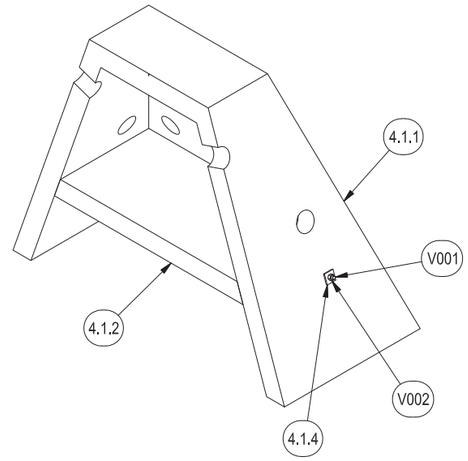

3D VIEWS

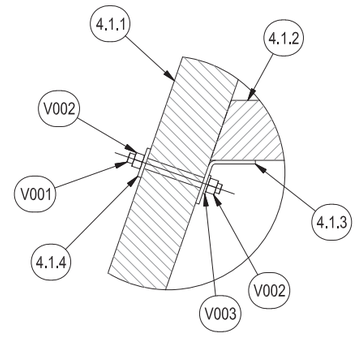

DETAIL 1
SCALE: 1:10

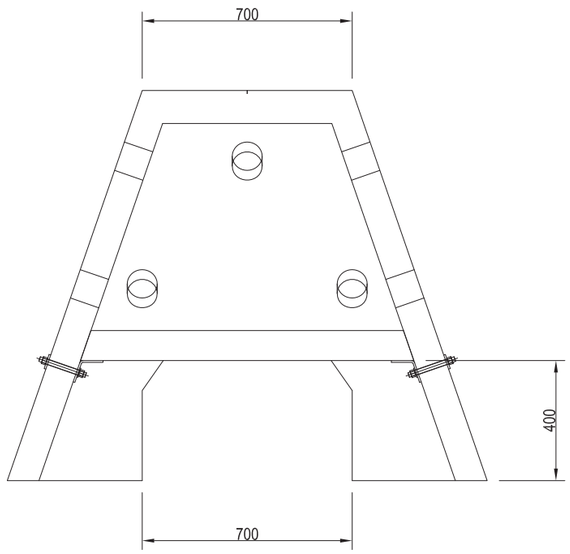

ITEM 4.1
CONCRETE ASSEMBLY
QTY:
SCALE: 1:20

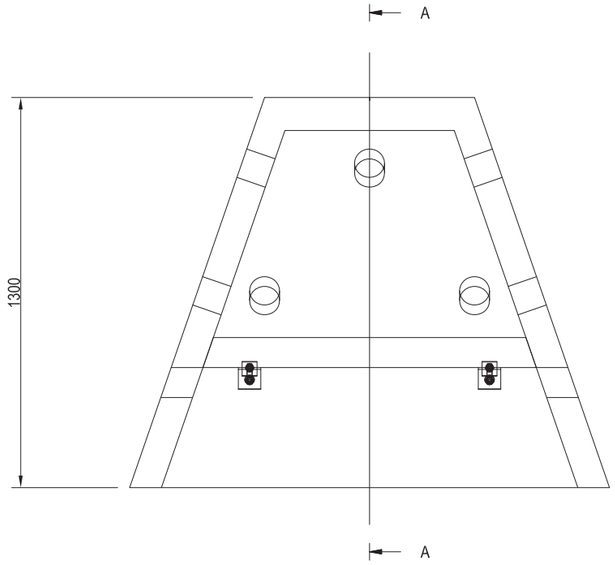

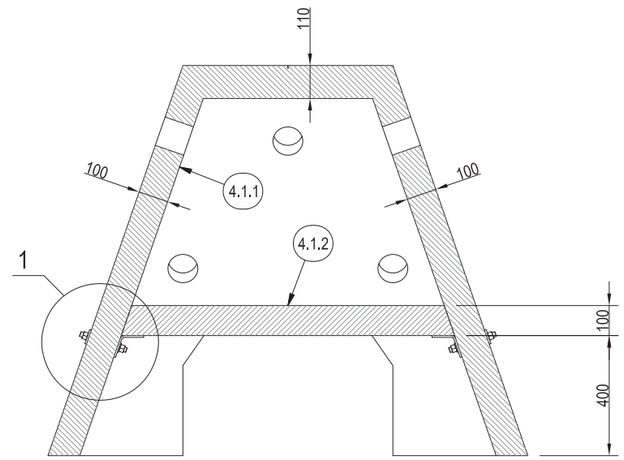

SECTION A
SCALE: 1:20

NO.	DATE	DESCRIPTION	APPVD
A	09.2020	ORIGINAL ISSUE	

AMENDMENTS AND REVISIONS

SURVEYED BY
SURVEY FILE No
LEVEL DATUM A.H.D.
HOR. DATUM / DATE MGA 94/2020

DRAWN | SIGNED | DATE
DESIGNED | SIGNED | DATE
CHECKED | SIGNED | DATE
MANAGER / CO-ORDINATOR Timothy Sunner Digitally signed by Timothy Sunner Date: 2020.11.09 14:19:47 +10'00'
TIMOTHY SUNNER | DATE

ASSET OWNER Jason Cocker Digitally signed by Jason Cocker Date: 2020.11.19 13:45:19 +10'00' | DATE
CERTIFIED NOT AN ENGINEER CERTIFIED DESIGN
PRINT NAME & RPEQ No | DATE

Mackay REGIONAL COUNCIL

PYRAMID REEF ASSEMBLY
CONCRETE
GENERAL ARRANGEMENT

SHEET 1 OF 1
WORKS JOB No. STANDARD
DRAWING No. A3-09753
AMEND. A

\\FileStore\K\Technical Services\Design\Projects\Facilities\Pioneer River\53409 Estuary Fish Habitat Improvement\Plans\A3-09753.dwg